National Semiconductor

FINAL
APRIL 2005

CP3BT13 Reprogrammable Connectivity Processor with Bluetooth® and CAN Interfaces

1.0 General Description

The CP3BT13 connectivity processor combines high performance with the massive integration needed for embedded Bluetooth applications. A powerful RISC core with on-chip SRAM and Flash memory provides high computing bandwidth, communications peripherals provide high I/O bandwidth, and an external bus provides system expandability.

On-chip communications peripherals include: Bluetooth Lower Link Controller, CAN, ACCESS.bus, Microwire/Plus, SPI, UART, and Advanced Audio Interface (AAI). Additional on-chip peripherals include DMA controller, CVSD/PCM conversion module, Timing and Watchdog Unit, Versatile Timer Unit, Multi-Function Timer, and Multi-Input Wakeup.

Bluetooth hand-held devices can be both smaller and lower in cost for maximum consumer appeal. The low voltage and advanced power-saving modes achieve new design points in the trade-off between battery size and operating time for handheld and portable applications.

In addition to providing the features needed for the next generation of embedded Bluetooth products, the CP3BT13 is backed up by the software resources designers need for rapid time-to-market, including an operating system, Bluetooth protocol stack implementation, reference designs, and an integrated development environment. Combined with National's LMX5252 Bluetooth radio transceiver, the CP3BT13 provides a complete Bluetooth system solution.

National Semiconductor offers a complete and industry-proven application development environment for CP3BT13 applications, including the IAR Embedded Workbench, iSYSTEM winIDEA and iC3000 Active Emulator, Bluetooth Development Board, Bluetooth Protocol Stack, and Application Software.

Block Diagram

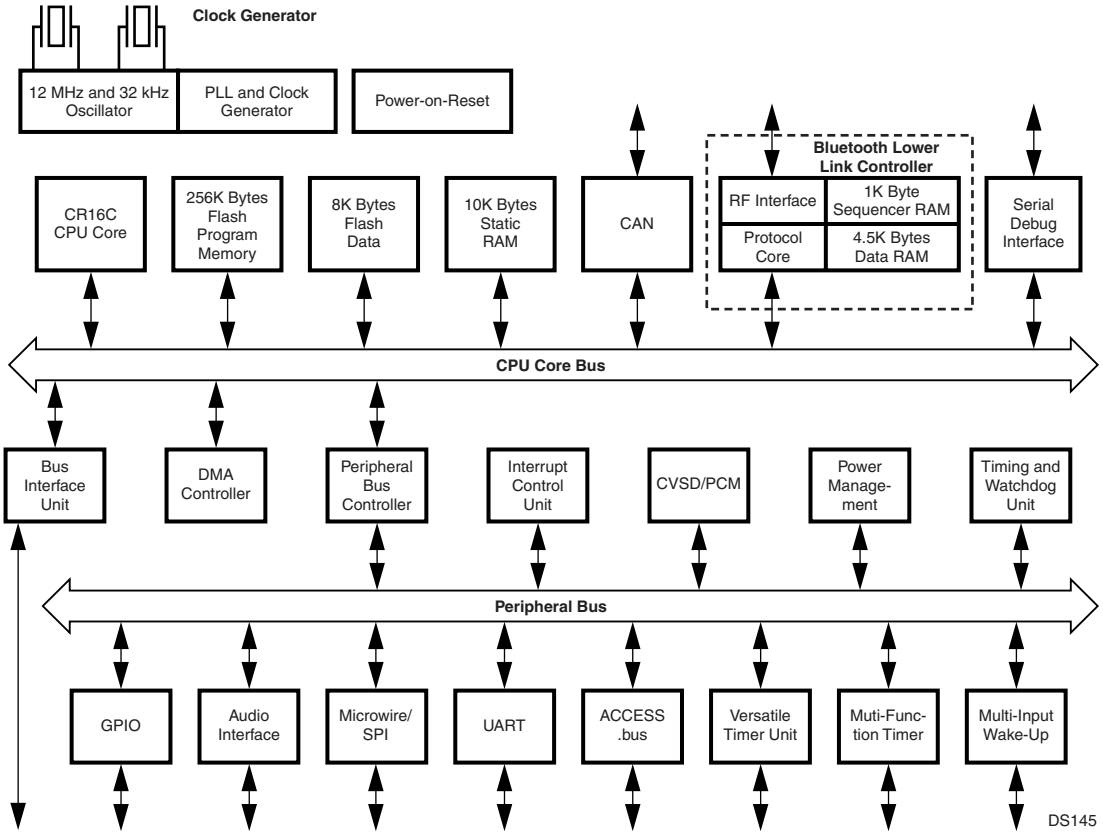

Bluetooth is a registered trademark of Bluetooth SIG, Inc. and is used under license by National Semiconductor.
TRI-STATE is a registered trademark of National Semiconductor Corporation.

©2005 National Semiconductor Corporation

Table of Contents

1.0 General Description . . . 1
2.0 Features . . . 3
3.0 Device Overview . . . 4
3.1 CR16C CPU Core . . . 4
3.2 Memory . . . 4
3.3 Input/Output Ports . . . 4
3.4 Bus Interface Unit . . . 4
3.5 Interrupt Control Unit (ICU) . . . 4
3.6 Bluetooth LLC . . . 4
3.7 Multi-Input Wake-up . . . 4
3.8 Triple Clock and Reset . . . 5
3.9 Power Management . . . 5
3.10 Multi-Function Timer . . . 5
3.11 Versatile Timer Unit . . . 5
3.12 Timing and Watchdog Module . . . 5
3.13 UART . . . 5
3.14 Microwire/SPI . . . 5
3.15 CAN Interface . . . 5
3.16 ACCESS.bus Interface . . . 6
3.17 DMA Controller . . . 6
3.18 Advanced Audio interface . . . 6
3.19 CVSD/PCM Conversion Module . . . 6
3.20 Serial Debug Interface . . . 6
3.21 Development Support . . . 6
4.0 Device Pinouts . . . 7
4.1 Pin DescriptionS . . . 12
5.0 CPU Architecture . . . 17
5.1 General-Purpose Registers . . . 17
5.2 Dedicated Address Registers . . . 17
5.3 Processor Status Register (PSR) . . . 18
5.4 Configuration Register (CFG) . . . 19
5.5 Addressing Modes . . . 20
5.6 Stacks . . . 21
5.7 Instruction Set . . . 21
6.0 Memory . . . 26
6.1 Operating Environment . . . 26
6.2 Bus Interface Unit (BIU) . . . 27
6.3 Bus Cycles . . . 27
6.4 BIU Control Registers . . . 27
6.5 Wait and Hold States . . . 30
7.0 System Configuration Registers . . . 31
7.1 Module Configuration Register (MCFG) . . . 31
7.2 Module Status Register (MSTAT) . . . 31
8.0 Flash Memory . . . 32
8.1 Flash Memory Protection . . . 32
8.2 Flash Memory Organization . . . 32
8.3 Flash Memory Operations . . . 33
8.4 Information Block Words . . . 35
8.5 Flash Memory Interface Registers . . . 36
9.0 DMA Controller . . . 42
9.1 Channel Assignment . . . 42
9.2 Transfer Types . . . 42
9.3 Operation Modes . . . 43
9.4 Software DMA Request . . . 44
9.5 Debug Mode . . . 44
9.6 DMA Controller Register Set . . . 44
10.0 Interrupts . . . 48
10.1 Non-Maskable Interrupts . . . 48
10.2 Maskable Interrupts . . . 48
10.3 Interrupt Controller Registers . . . 48
10.4 Maskable Interrupt Sources . . . 50
10.5 Nested Interrupts . . . 51
11.0 Triple Clock and Reset . . . 52
11.1 External Crystal Network . . . 53
11.2 Main Clock . . . 53
11.3 Slow Clock . . . 54
11.4 PLL Clock . . . 54
11.5 System Clock . . . 54
11.6 Auxiliary Clocks . . . 54
11.7 Power-On Reset . . . 54
11.8 External Reset . . . 54
11.9 Clock and Reset Registers . . . 56
12.0 Power Management . . . 58
12.1 Active Mode . . . 58
12.2 Power Save Mode . . . 58
12.3 Idle Mode . . . 58
12.4 Halt Mode . . . 58
12.5 Hardware Clock Control . . . 58
12.6 Power Management Registers . . . 59
12.7 Switching Between Power Modes . . . 60
13.0 Multi-Input Wake-Up . . . 62
13.1 Multi-Input Wake-Up Registers . . . 62
13.2 Programming Procedures . . . 64
14.0 Input/Output Ports . . . 65
14.1 Port Registers . . . 65
14.2 Open-Drain Operation . . . 68
15.0 Bluetooth Controller . . . 69
15.1 RF Interface . . . 69
15.2 Serial Interface . . . 70
15.3 LMX5251 Power-Up Sequence . . . 73
15.4 LMX5252 Power-Up Sequence . . . 73
15.5 Bluetooth Sleep Mode . . . 74
15.6 Bluetooth Global Registers . . . 74
15.7 Bluetooth Sequencer RAM . . . 74
15.8 Bluetooth Shared Data RAM . . . 75
16.0 CAN Module . . . 76
16.1 Functional Description . . . 76
16.2 Basic CAN Concepts . . . 77
16.3 Message Transfer . . . 85
16.4 Acceptance Filtering . . . 86
16.5 Receive Structure . . . 87
16.6 Transmit Structure . . . 90
16.7 Interrupts . . . 92
16.8 Time Stamp Counter . . . 93
16.9 Memory Organization . . . 94
16.10 CAN Controller Registers . . . 95
16.11 System Start-Up and Multi-Input Wake-Up . . . 107
16.12 Usage Hint . . . 109
17.0 Advanced Audio Interface . . . 110
17.1 Audio Interface Signals . . . 110
17.2 Audio Interface Modes . . . 110
17.3 Bit Clock Generation . . . 113
17.4 Frame Clock Generation . . . 113
17.5 Audio Interface Operation . . . 113
17.6 Communication Options . . . 115
17.7 Audio Interface Registers . . . 118
17.8 Usage Hints . . . 124
18.0 CVSD/PCM Conversion Module . . . 125
18.1 Operation . . . 125
18.2 PCM Conversions . . . 125
18.3 CVSD Conversion . . . 126
18.4 PCM to CVSD Conversion . . . 126
18.5 CVSD to PCM Conversion . . . 126
18.6 Interrupt Generation . . . 126
18.7 DMA Support . . . 126
18.8 Freeze . . . 127
18.9 CVSD/PCM Converter Registers . . . 127
19.0 UART Module . . . 130
19.1 Functional Overview . . . 130
19.2 UART Operation . . . 130
19.3 UART Registers . . . 135
19.4 Baud Rate Calculations . . . 139
20.0 Microwire/SPI Interface . . . 142
20.1 Microwire Operation . . . 142
20.2 Master Mode . . . 144
20.3 Slave Mode . . . 145
20.4 Interrupt Generation . . . 145
20.5 Microwire Interface Registers . . . 145
21.0 ACCESS.bus Interface . . . 148
21.1 ACB Protocol Overview . . . 148
21.2 ACB Functional Description . . . 150
21.3 ACCESS.bus Interface Registers . . . 152
21.4 Usage Hints . . . 156
22.0 Timing and Watchdog Module . . . 157
22.1 TWM Structure . . . 157
22.2 Timer T0 Operation . . . 157
22.3 Watchdog Operation . . . 158
22.4 TWM Registers . . . 158
22.5 Watchdog Programming Procedure . . . 160
23.0 Multi-Function Timer . . . 161
23.1 Timer Structure . . . 161
23.2 Timer Operating Modes . . . 162
23.3 Timer Interrupts . . . 166
23.4 Timer I/O Functions . . . 167
23.5 Timer Registers . . . 168
24.0 Versatile Timer Unit (VTU) . . . 171
24.1 VTU Functional Description . . . 171
24.2 VTU Registers . . . 175
25.0 Register Map . . . 179
26.0 Register Bit Fields . . . 190
27.0 Electrical Characteristics . . . 201
27.1 Absolute Maximum Ratings . . . 201
27.2 DC Electrical Characteristics . . . 201
27.3 Flash Memory On-Chip Programming . . . 203
27.4 Output Signal Levels . . . 204
27.5 Clock and Reset Timing . . . 204
27.6 UART Timing . . . 206
27.7 I/O Port Timing . . . 207
27.8 Advanced Audio Interface (AAI) Timing . . . 208
27.9 Microwire/SPI Timing . . . 210
27.10 ACCESS.bus Timing . . . 215
27.11 Multi-Function Timer (MFT) Timing . . . 218
27.12 Versatile Timing Unit (VTU) Timing . . . 219
27.13 External Bus Timing . . . 220
28.0 Pin Assignments . . . 226
29.0 Revision History . . . 228
30.0 Physical Dimensions . . . 229

2.0 Features

CPU Features

- Fully static RISC processor core, capable of operating from 0 to 24 MHz with zero wait/hold states
- Minimum 41.7 ns instruction cycle time with a 24-MHz internal clock frequency, based on a 12-MHz external input
- 30 independently vectored peripheral interrupts

On-Chip Memory

- 256K bytes reprogrammable Flash program memory
- 8K bytes Flash data memory
- 10K bytes of static RAM data memory
- Addresses up to 8 Mbytes of external memory

Broad Range of Hardware Communications Peripherals

- Bluetooth Lower Link Controller (LLC) including a shared 4.5K byte Bluetooth RAM and 1K byte Bluetooth Sequencer RAM
- Full CAN interface with 15 message buffers conforming to CAN specification 2.0B active
- ACCESS.bus serial bus (compatible with Philips I^2C bus)
- 8/16-bit SPI, Microwire/Plus serial interface
- Universal Asynchronous Receiver/Transmitter (UART)
- Advanced Audio Interface (AAI) to connect to external 8/13-bit PCM Codecs as well as to ISDN-Controllers through the IOM-2 interface (slave only)
- CVSD/PCM converter supporting one bidirectional audio connection

General-Purpose Hardware Peripherals

- Dual 16-bit Multi-Function Timer
- Versatile Timer Unit with four subsystems (VTU)
- Four channel DMA controller
- Timing and Watchdog Unit

Flexible I/O

- Up to 40 general-purpose I/O pins (shared with on-chip peripheral I/O pins)
- Programmable I/O pin characteristics: TRI-STATE output, push-pull output, weak pull-up input, high-impedance input
- Schmitt triggers on general purpose inputs
- Multi-Input Wakeup

Extensive Power and Clock Management Support

- On-chip Phase Locked Loop
- Support for multiple clock options
- Dual clock and reset
- Power-down modes

Power Supply

- I/O port operation at 2.5V to 3.3V
- Core logic operation at 2.5V
- On-chip power-on reset

Temperature Range

- -40°C to +85°C (Industrial)

Packages

- CSP-48, LQFP-100

Complete Development Environment

- Pre-integrated hardware and software support for rapid prototyping and production
- Integrated environment
- Project manager
- Multi-file C source editor
- High-level C source debugger
- Comprehensive, integrated, one-stop technical support

Bluetooth Protocol Stack

- Applications can interface to the high-level protocols or directly to the low-level Host Controller Interface (HCI)
- Transport layer support allows HCI command-based interface over UART port
- Baseband (Link Controller) minimizes the performance demand on the CPU
- Link Manager (LM)
- Logical Link Control and Adaptation Protocol (L2CAP)
- Service Discovery Protocol (SDP)
- RFCOMM Serial Port Emulation Protocol
- All packet types, piconet, and scatternet functionality supported

CP3BT13 Connectivity Processor Selection Guide

NSID	Speed (MHz)	Temp. Range	Program Flash (kBytes)	Data Flash (kBytes)	SRAM (kBytes)	External Address Lines	I/Os	Package Type	Pack Method
CP3BT13G38	24	-40° to +85°C	256	8	10	23	40	LQFP-100	Tray
CP3BT13G38X	24	-40° to +85°C	256	8	10	23	40	LQFP-100	1000-T&R
CP3BT13K38X	24	-40° to +85°C	256	8	10	0	23	CSP-48	2500-T&R
CP3BT13K38Y	24	-40° to +85°C	256	8	10	0	23	CSP-48	250-T&R

T&R = Tape and Reel

3.0 Device Overview

The CP3BT13 connectivity processor is a complete microcomputer with all system timing, interrupt logic, program memory, data memory, I/O ports included on-chip, making them well-suited to a wide range of embedded applications. The block diagram on page 1 shows the major on-chip components of the CP3BT13.

3.1 CR16C CPU CORE

The CP3BT13 implements the CR16C CPU core module. The high performance of the CPU core results from the implementation of a pipelined architecture with a two-bytes-per-cycle pipelined system bus. As a result, the CPU can support a peak execution rate of one instruction per clock cycle.

For more information, please refer to the CR16C Programmer's Reference Manual (document number 424521772-101, which may be downloaded from National's web site at http://www.national.com).

3.2 MEMORY

The CP3BT13 supports a uniform linear address space of up to 16 megabytes. Three types of on-chip memory occupy specific regions within this address space:

- 256K bytes of Flash program memory
- 8K bytes of Flash data memory
- 10K bytes of static RAM
- Up to 8M bytes of external memory (100-pin devices)

The 256K bytes of Flash program memory are used to store the application program, Bluetooth protocol stack, and real-time operating system. The Flash memory has security features to prevent unintentional programming and to prevent unauthorized access to the program code. This memory can be programmed with an external programming unit or with the device installed in the application system (in-system programming).

The 8K bytes of Flash data memory are used for non-volatile storage of data entered by the end-user, such as configuration settings.

The 10K bytes of static RAM are used for temporary storage of data and for the program stack and interrupt stack. Read and write operations can be byte-wide or word-wide, depending on the instruction executed by the CPU.

Up to 8M bytes of external memory can be added on an external bus. The external bus is only available on devices in 100-pin packages.

For Flash program and data memory, the device internally generates the necessary voltages for programming. No additional power supply is required.

3.3 INPUT/OUTPUT PORTS

The device has up to 40 software-configurable I/O pins, organized into five 8-pin ports called Port B, Port C, Port G, Port H, and Port I. Each pin can be configured to operate as a general-purpose input or general-purpose output. In addition, many I/O pins can be configured to operate as inputs or outputs for on-chip peripheral modules such as the UART, timers, or Microwire/SPI interface.

The I/O pin characteristics are fully programmable. Each pin can be configured to operate as a TRI-STATE output, push-pull output, weak pull-up input, or high-impedance input.

3.4 BUS INTERFACE UNIT

The Bus Interface Unit (BIU) controls access to internal/external memory and I/O. It determines the configured parameters for bus access (such as the number of wait states for memory access) and issues the appropriate bus signals for each requested access.

The BIU uses a set of control registers to determine how many wait states and hold states are used when accessing Flash program memory, and the I/O area (Port B and Port C). At start-up, the configuration registers are set for slowest possible memory access. To achieve fastest possible program execution, appropriate values must be programmed. These settings vary with the clock frequency and the type of off-chip device being accessed.

3.5 INTERRUPT CONTROL UNIT (ICU)

The ICU receives interrupt requests from internal and external sources and generates interrupts to the CPU. An interrupt is an event that temporarily stops the normal flow of program execution and causes a separate interrupt handler to be executed. After the interrupt is serviced, CPU execution continues with the next instruction in the program following the point of interruption.

Interrupts from the timers, UART, Microwire/SPI interface, and Multi-Input Wake-Up, are all maskable interrupts; they can be enabled or disabled by software. There are 32 maskable interrupts, assigned to 32 linear priority levels.

The highest-priority interrupt is the Non-Maskable Interrupt ($\overline{\text{NMI}}$), which is generated by a signal received on the $\overline{\text{NMI}}$ input pin.

3.6 BLUETOOTH LLC

The integrated hardware Bluetooth Lower Link Controller (LLC) complies to the Bluetooth Specification Version 1.1 and integrates the following functions:

- 4.5K-byte dedicated Bluetooth data RAM
- 1K-byte dedicated Bluetooth Sequencer RAM
- Support of all Bluetooth 1.1 packet types
- Support for fast frequency hopping of 1600 hops/s
- Access code correlation and slot timing recovery circuit
- Power Management Control Logic
- BlueRF-compatible interface to connect with National's LMX5252 and other RF transceiver chips

3.7 MULTI-INPUT WAKE-UP

The Multi-Input Wake-Up (MIWU) module can be used for either of two purposes: to provide inputs for waking up (exiting) from the Halt, Idle, or Power Save mode; or to provide general-purpose edge-triggered maskable interrupts from external sources. This 16-channel module generates four programmable interrupts to the CPU based on the signals received on its 16 input channels. Channels can be individually enabled or disabled, and programmed to respond to positive or negative edges.

3.8 TRIPLE CLOCK AND RESET

The Triple Clock and Reset module generates a high-speed System Clock from an external crystal network. It also provides the system reset signal and a power-on reset function.

This module generates a slow System Clock (32.768 kHz) from an optional external crystal network. The Slow Clock is used for operating the device in power-save mode. The 32.768 kHz external crystal network is optional, because the Slow Clock can be derived from the high-speed clock by a prescaler. Also, two independent clocks divided down from the high speed clock are available on output pins.

The Triple Clock and Reset module provides the clock signals required for the operation of the various CP3BT13 on-chip modules. From external crystal networks, it generates the Main Clock, which can be scaled up to 24 MHz from an external 12 MHz input clock, and a 32.768 kHz secondary System Clock. The 12 MHz external clock is primarily used as the reference frequency for the on-chip PLL. Also the clock for modules which require a fixed clock rate (e.g. the Bluetooth LLC and the CVSD/PCM transcoder) is generated through prescalers from the 12 MHz clock. The PLL may be used to drive the high-speed System Clock through a prescaler. Alternatively, the high speed System Clock can be derived directly from the 12 MHz Main Clock.

In addition, this module generates the device reset by using reset input signals coming from an external reset and various on-chip modules.

3.9 POWER MANAGEMENT

The Power Management Module (PMM) improves the efficiency of the device by changing the operating mode and power consumption to match the required level of activity.

The device can operate in any of four power modes:

- *Active*—The device runs at full speed using the high-frequency clock. All device functions are fully operational.
- *Power Save*—The device operates at reduced speed using the Slow Clock. The CPU and some modules can continue to operate at this low speed.
- *Idle*—The device is inactive except for the Power Management Module and Timing and Watchdog Module, which continue to operate using the Slow Clock.
- *Halt*—The device is inactive but still retains its internal state (RAM and register contents).

3.10 MULTI-FUNCTION TIMER

The Multi-Function Timer (MFT) module contains a pair of 16-bit timer/counter registers. Each timer/counter unit can be configured to operate in any of the following modes:

- *Processor-Independent Pulse Width Modulation (PWM) mode*—Generates pulses of a specified width and duty cycle and provides a general-purpose timer/counter.
- *Dual Input Capture mode*—Measures the elapsed time between occurrences of external event and provides a general-purpose timer/counter.
- *Dual Independent Timer mode*—Generates system timing signals or counts occurrences of external events.
- *Single Input Capture and Single Timer mode*—Provides one external event counter and one system timer.

3.11 VERSATILE TIMER UNIT

The Versatile Timer Unit (VTU) module contains four independent timer subsystems, each operating in either dual 8-bit PWM configuration, as a single 16-bit PWM timer, or a 16-bit counter with two input capture channels. Each of the four timer subsystems offer an 8-bit clock prescaler to accommodate a wide range of frequencies.

3.12 TIMING AND WATCHDOG MODULE

The Timing and Watchdog Module (TWM) contains a Real-Time timer and a Watchdog unit. The Real-Time Clock Timing function can be used to generate periodic real-time based system interrupts. The timer output is one of 16 inputs to the Multi-Input-Wake-Up module which can be used to exit from a power-saving mode. The Watchdog unit is designed to detect the application program getting stuck in an infinite loop resulting in loss of program control or “runaway” programs. When the watchdog triggers, it resets the device. The TWM is clocked by the low-speed System Clock.

3.13 UART

The UART supports a wide range of programmable baud rates and data formats, parity generation, and several error detection schemes. The baud rate is generated on-chip, under software control.

The UART offers a wake-up condition from the power-save mode using the Multi-Input Wake-Up module.

3.14 MICROWIRE/SPI

The Microwire/SPI (MWSPI) interface module supports synchronous serial communications with other devices that conform to Microwire or Serial Peripheral Interface (SPI) specifications. It supports 8-bit and 16-bit data transfers.

The Microwire interface allows several devices to communicate over a single system consisting of four wires: serial in, serial out, shift clock, and slave enable. At any given time, the Microwire interface operates as the master or a slave. The Microwire interface supports the full set of slave select for multi-slave implementation.

In master mode, the shift clock is generated on chip under software control. In slave mode, a wake-up out of power-save mode is triggered using the Multi-Input Wake-Up module.

3.15 CAN INTERFACE

The CAN module contains a Full CAN 2.0B class, CAN serial bus interface for applications that require a high-speed (up to 1Mbits per second) or a low-speed interface with CAN bus master capability. The data transfer between CAN and the CPU is established by 15 memory-mapped message buffers, which can be individually configured as receive or transmit buffers. An incoming message is filtered by two masks, one for the first 14 message buffers and another one for the 15th message buffer to provide a basic CAN path. A priority decoder allows any buffer to have the highest or lowest transmit priority. Remote transmission requests can be processed automatically by automatic reconfiguration to a receiver after transmission or by automated transmit scheduling upon reception. In addition, a time stamp counter (16-bits wide) is provided to support real time applications.

The CAN module is a fast core bus peripheral, which allows single cycle byte or word read/write access. A set of diagnostic features (such as loopback, listen only, and error identification) support the development with the CAN module and provide a sophisticated error management tool.

The CAN receiver can trigger a wake-up condition out of the low-power modes through the Multi-Input Wake-Up module.

3.16 ACCESS.BUS INTERFACE

The ACCESS.bus interface module (ACB) is a two-wire serial interface with the ACCESS.bus physical layer. It is also compatible with Intel's System Management Bus (SMBus) and Philips' I^2C bus. The ACB module can be configured as a bus master or slave, and can maintain bidirectional communications with both multiple master and slave devices.

The ACCESS.bus receiver can trigger a wake-up condition out of the low-power modes using the Multi-Input Wake-Up module.

3.17 DMA CONTROLLER

The Direct Memory Access Controller (DMAC) can speed up data transfer between memory and I/O devices or between two memories, relative to data transfers performed directly by the CPU. A method called cycle-stealing allows the CPU and the DMAC to use the core bus in parallel. The DMAC implements four independent DMA channels. DMA requests from a primary and a secondary source are recognized for each DMA channel, as well as a software DMA request issued directly by the CPU. Table 1 shows the DMA channel assignment on the CP3BT13 architecture. The following on-chip modules can assert a DMA request to the DMAC:

- CR16C (Software DMA request)
- UART
- Advanced Audio Interface
- CVSD/PCM Converter

Table 1 shows how the four DMA channels are assigned to the modules listed above.

Table 1 DMA Channel Assignment

Channel	Primary/ Secondary	Peripheral	Transaction
0	Primary	Reserved	Read/Write
	Secondary	UART	Read
1	Primary	UART	Write
	Secondary	Unused	N/A
2	Primary	AAI	Read
	Secondary	CVSD/PCM	Read
3	Primary	AAI	Write
	Secondary	CVSD/PCM	Write

3.18 ADVANCED AUDIO INTERFACE

The audio interface provides a serial synchronous, full-duplex interface to codecs and similar serial devices. Transmit and receive paths operate asynchronously with respect to each other. Each path uses three signals for communication: shift clock, frame synchronization, and data.

In case receive and transmit use separate shift clocks and frame sync signals, the interface operates in its asynchronous mode. Alternatively, the transmit and receive path can share the same shift clock and frame sync signals for synchronous mode operation.

The interface can handle data words of either 8- or 16-bit length and data frames can consist of up to four slots.

In the normal mode of operation, the interface only transfers one word at a periodic rate. In the network mode, the interface transfers multiple words at a periodic rate. The periodic rate is also called a data frame and each word within one frame is called a slot. The beginning of each new data frame is marked by the frame sync signal.

3.19 CVSD/PCM CONVERSION MODULE

The CVSD/PCM module performs conversion between CVSD and PCM data, in which the CVSD encoding is as defined in the Bluetooth specification 1.0 and the PCM data can be 8-bit µ-Law, 8-bit A-Law, or 13-bit to 16-bit Linear.

3.20 SERIAL DEBUG INTERFACE

The Serial Debug Interface module (SDI module) provides a JTAG-based serial link to an external debugger, for example running on a PC. In addition, the SDI module integrates an on-chip debug module, which allows the user to set up to four hardware breakpoints on instruction execution and data transfer. The SDI module can act as a CPU bus master to access all memory mapped resources, such as RAM and peripherals. It also provides fast program download into the on-chip Flash program memory using the JTAG interface.

Note: The SDI module may assert Freeze mode to gather information, which may cause periodic fluctuations in response (bus availability, interrupt latency, etc.). Anomalous behavior often may be traced to SDI activity.

3.21 DEVELOPMENT SUPPORT

In addition to providing the features needed for the next generation of embedded Bluetooth products, the CP3BT13 is backed up by the software resources designers need for rapid time-to-market, including an operating system, Bluetooth protocol stack implementation, peripheral drivers, reference designs, and an integrated development environment. Combined with National's LMX5252 Bluetooth radio transceiver, the CP3BT13 provides a total Bluetooth system solution.

National Semiconductor offers a complete and industry-proven application development environment for CP3BT13 applications, including the IAR Embedded Workbench, iSYSTEM winIDEA and iC3000 Active Emulator, Bluetooth Development Board, Bluetooth Protocol Stack, and Application Software. See your National Semiconductor sales representative for current information on availability and features of emulation equipment and evaluation boards.

4.0 Device Pinouts

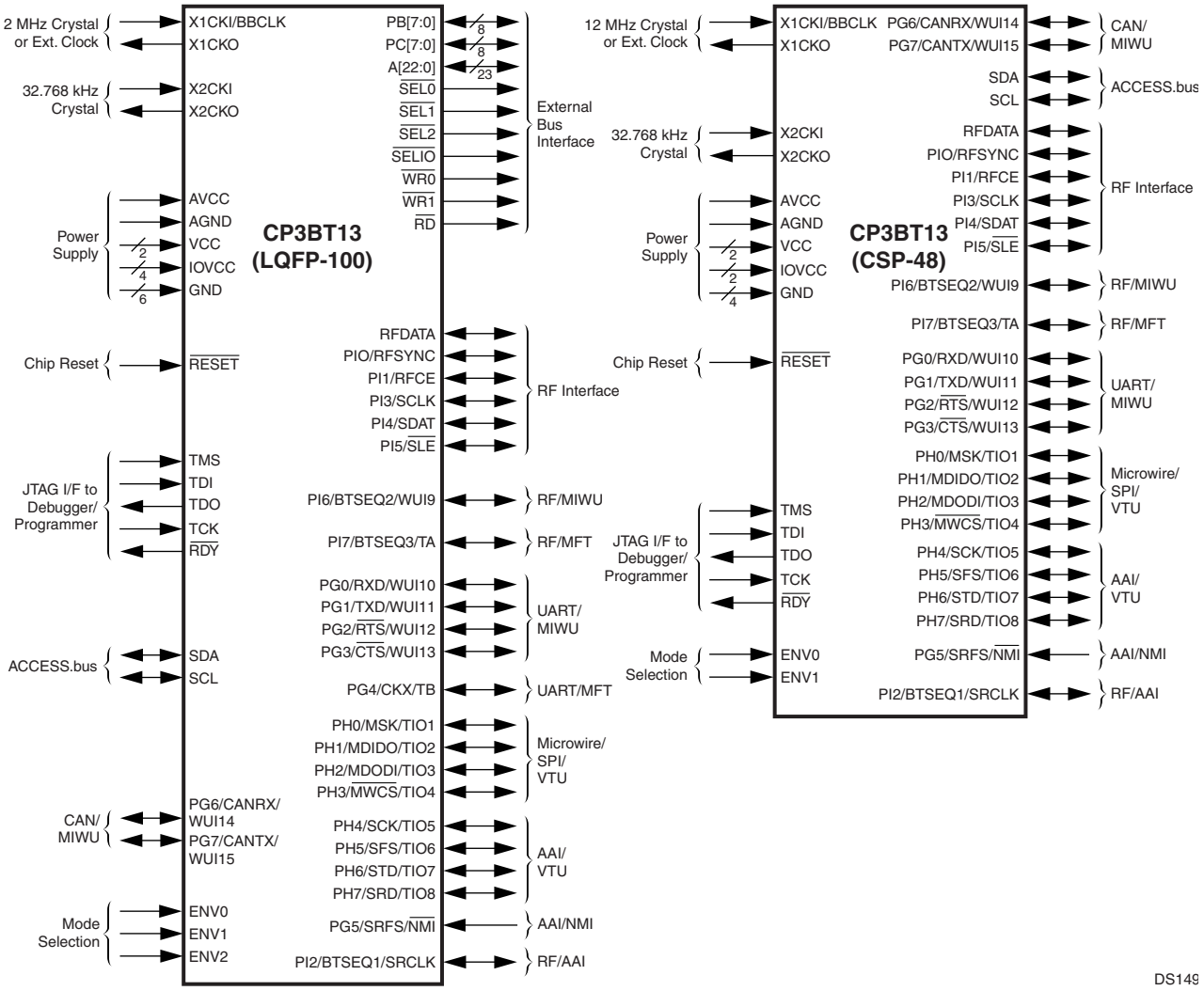

Table 2 Pin Assignments for 100-Pin Package

Pin Name	Alternate Function(s)	Pin Numbers	Type
A14		1	O
A13		2	O
A12		3	O
A11		4	O
A10		5	O
PH6	STD/TIO7	6	GPIO
PH7	SRD/TIO8	7	GPIO
ENV1		8	I/O
A9		9	O
A8		10	O
A7		11	O
A6		12	O
A5		13	O

Table 2 Pin Assignments for 100-Pin Package

Pin Name	Alternate Function(s)	Pin Numbers	Type
A4		14	O
VCC		15	PWR
X2CKI		16	I
X2CKO		17	O
GND		18	PWR
AVCC		19	PWR
AGND		20	PWR
IOVCC		21	PWR
X1CKO		22	O
X1CKI	BBCLK	23	I
GND		24	PWR
RFDATA		25	I/O
A3		26	O
A2		27	O
A1		28	O
A0		29	O
PI0	RFSYNC	30	GPIO
PI1	RFCE	31	GPIO
PI2	BTSEQ1/SRCLK	32	GPIO
PB0	D0	33	GPIO
PB1	D1	34	GPIO
PB2	D2	35	GPIO
PB3	D3	36	GPIO
PB4	D4	37	GPIO
PB5	D5	38	GPIO
PB6	D6	39	GPIO
PB7	D7	40	GPIO
GND		41	PWR
IOVCC		42	PWR
PI3	SCLK	43	GPIO
PI4	SDAT	44	GPIO
PI5	$\overline{\text{SLE}}$	45	GPIO
PI6	WUI9	46	GPIO
PI7	TA	47	GPIO
PG0	RXD/WUI10	48	GPIO
PG1	TXD/WUI11	49	GPIO
PC0	D8	50	GPIO
PG2	$\overline{\text{RTS}}$/WUI12	51	GPIO
PG3	$\overline{\text{CTS}}$/WUI13	52	GPIO
PC1	D9	53	GPIO
PC2	D10	54	GPIO
PC3	D11	55	GPIO
PC4	D12	56	GPIO

Table 2 Pin Assignments for 100-Pin Package

Pin Name	Alternate Function(s)	Pin Numbers	Type
PC5	D13	57	GPIO
PC6	D14	58	GPIO
PC7	D15	59	GPIO
PG5	SRFS/$\overline{\text{NMI}}$	60	GPIO
TMS		61	I
TCK		62	I
TDI		63	I
GND		64	PWR
IOVCC		65	PWR
ENV2		66	I/O
SEL0		67	O
PG4	CKX/TB	68	GPIO
PG6	CANRX/WUI14	69	GPIO
PG7	CANTX/WUI15	70	GPIO
SCL		71	I/O
SDA		72	I/O
TDO		73	O
A22		74	O
RDY		75	O
SEL1		76	O
SEL2		77	O
SELIO		78	O
A21		79	O
A20		80	O
PH0	MSK/TIO1	81	GPIO
PH1	MDIDO/TIO2	82	GPIO
PH2	MDODI/TIO3	83	GPIO
PH3	$\overline{\text{MWCS}}$/TIO4	84	GPIO
ENV0		85	I/O
IOVCC		86	PWR
GND		87	PWR
VCC		88	PWR
GND		89	PWR
RESET		90	I
RD		91	O
WR0		92	O
WR1		93	O
A19		94	O
A18		95	O
A17		96	O
A16		97	O
A15		98	O

Table 2 Pin Assignments for 100-Pin Package

Pin Name	Alternate Function(s)	Pin Numbers	Type
PH4	SCK/TIO5	99	GPIO
PH5	SFS/TIO6	100	GPIO

Note 1: The ENV0, ENV1, ENV2, TCK, TDI, and TMS pins each have a weak pull-up to keep the input from floating.
Note 2: The $\overline{\text{RESET}}$ input has a weak pulldown.
Note 3: These functions are always enabled, due to the direct low-impedance path to these pins.

Table 3 Pin Assignments for 48-Pin Package

Pin Name	Alternate Function(s)	Pin Number	Type
PH6	STD/TIO7	1	GPIO
PH7	SRD/TIO8	2	GPIO
ENV1		3	I/O
VCC		4	PWR
X2CKI		5	I
X2CKO		6	O
GND		7	PWR
AVCC		8	PWR
AGND		9	PWR
IOVCC		10	PWR
X1CKO		11	O
X1CKI	BBCLK	12	I
GND		13	PWR
RFDATA		14	I/O
PI0	RFSYNC	15	GPIO
PI1	RFCE	16	GPIO
PI2	BTSEQ1/SRCLK	17	GPIO
PI3	SCLK	18	GPIO
PI4	SDAT	19	GPIO
PI5	$\overline{\text{SLE}}$	20	GPIO
PI6	BTSEQ2/WUI9	21	GPIO
PI7	BTSEQ3/TA	22	GPIO
PG0	RXD/WUI10	23	GPIO
PG1	TXD/WUI11	24	GPIO
PG2	$\overline{\text{RTS}}$/WUI12	25	GPIO
PG3	$\overline{\text{CTS}}$/WUI13	26	GPIO
PG5	SRFS/$\overline{\text{NMI}}$	27	GPIO
TMS		28	I
TCK		29	I
TDI		30	I
GND		31	PWR
IOVCC		32	PWR
PG6	CANRX/WUI14	33	O, GPIO
PG7	CANTX/WUI15	34	O, GPIO
SCL		35	I/O
SDA		36	PWR, I/O

Pin Name	Alternate Function(s)	Pin Number	Type
TDO		37	PWR, O
$\overline{\text{RDY}}$		38	O
PH0	MSK/TIO1	39	GPIO
PH1	MDIDO/TIO2	40	GPIO
PH2	MDODI/TIO3	41	GPIO
PH3	$\overline{\text{MWCS}}$/TIO4	42	GPIO
ENV0		43	I/O
VCC		44	PWR
GND		45	PWR
$\overline{\text{RESET}}$		46	I
PH4	SCK/TIO5	47	GPIO
PH5	SFS/TIO6	48	GPIO

4.1 PIN DESCRIPTIONS

Some pins may be enabled as general-purpose I/O-port pins or as alternate functions associated with specific peripherals or interfaces. These pins may be individually configured as port pins, even when the associated peripheral or interface is enabled. Table 4 lists the device pins.

Table 4 CP3BT13 Pin Descriptions for the 100-Pin LQFP Package

Name	Pins	I/O	Primary Function	Alternate Name	Alternate Function
X1CKI	1	Input	12 MHz Oscillator Input	BBCLK	BB reference clock for the RF Interface
X1CKO	1	Output	12 MHz Oscillator Output	None	None
X2CKI	1	Input	32 kHz Oscillator Input	None	None
X2CKO	1	Output	32 kHz Oscillator Output	None	None
AVCC	1	Input	PLL Analog Power Supply	None	None
IOVCC	4	Input	2.5V - 3.3V I/O Power Supply	None	None
VCC	2	Input	2.5V Core Logic Power Supply	None	None
GND	6	Input	Reference Ground	None	None
AGND	1	Input	PLL Analog Ground	None	None
$\overline{\text{RESET}}$	1	Input	Chip general reset	None	None
TMS	1	Input	JTAG Test Mode Select (with internal weak pull-up)	None	None
TDI	1	Input	JTAG Test Data Input (with internal weak pull-up)	None	None
TDO	1	Output	JTAG Test Data Output	None	None
TCK	1	Input	JTAG Test Clock Input (with internal weak pull-up)	None	None
$\overline{\text{RDY}}$	1	Output	NEXUS Ready Output	None	None
PG0	1	I/O	Generic I/O	RXD	UART Receive Data Input
				WUI10	Multi-Input Wake-Up Channel 10
PG1	1	I/O	Generic I/O	TXD	UART Transmit Data Output
				WUI11	Multi-Input Wake-Up Channel 11
PG2	1	I/O	Generic I/O	$\overline{\text{RTS}}$	UART Ready-To-Send Output
				WUI12	Multi-Input Wake-Up Channel 12
PG3	1	I/O	Generic I/O	$\overline{\text{CTS}}$	UART Clear-To-Send Input
				WUI13	Multi-Input Wake-Up Channel 13
PG4	1	I/O	Generic I/O	CKX	UART Clock Input
				TB	Multi Function Timer Port B
PG5	1	I/O	Generic I/O	SRFS	AAI Receive Frame Sync
				$\overline{\text{NMI}}$	Non-Maskable Interrupt Input
PG6	1	I/O	Generic I/O	CANRX	CAN Receive Pin
				WUI14	Multi-Input Wake-Up Channel 14
PG7	1	I/O	Generic I/O	CANTX	CAN Transmit Pin
				WUI15	Multi-Input Wake-Up Channel 15

Name	Pins	I/O	Primary Function	Alternate Name	Alternate Function
PH0	1	I/O	Generic I/O	MSK	SPI Shift Clock
				TIO1	Versatile Timer Channel 1
PH1	1	I/O	Generic I/O	MDIDO	SPI Master In Slave Out
				TIO2	Versatile Timer Channel 2
PH2	1	I/O	Generic I/O	MDODI	SPI Master Out Slave In
				TIO3	Versatile Timer Channel 3
PH3	1	I/O	Generic I/O	$\overline{\text{MWCS}}$	SPI Slave Select Input
				TIO4	Versatile Timer Channel 4
PH4	1	I/O	Generic I/O	SCK	AAI Clock
				TIO5	Versatile Timer Channel 5
PH5	1	I/O	Generic I/O	SFS	AAI Frame Synchronization
				TIO6	Versatile Timer Channel 6
PH6	1	I/O	Generic I/O	STD	AAI Transmit Data Output
				TIO7	Versatile Timer Channel 7
PH7	1	I/O	Generic I/O	SRD	AAI Receive Data Input
				TIO8	Versatile Timer Channel 8
RFDATA	1	I/O	Bluetooth RX/TX Data Pin	None	None
PI0	1	I/O	Generic I/O	RFSYNC	BT AC Correlation/TX Enable Output
PI1	1	I/O	Generic I/O	RFCE	BT RF Chip Enable Output
PI2	1	I/O	Generic I/O	BTSEQ1	Bluetooth Sequencer Status
				SRCLK	AAI Receive Clock
PI3	1	I/O	Generic I/O	SCLK	BT Serial I/F Shift Clock Output
PI4	1	I/O	Generic I/O	SDAT	BT Serial I/F Data
PI5	1	I/O	Generic I/O	$\overline{\text{SLE}}$	BT Serial I/F Load Enable Output
PI6	1	I/O	Generic I/O	WUI9	Multi-Input Wake-Up Channel 9
				BTSEQ2	Bluetooth Sequencer Status
PI7	1	I/O	Generic I/O	TA	Multi Function Timer Port A
				BTSEQ3	Bluetooth Sequencer Status
SDA	1	I/O	ACCESS.bus Serial Data	None	None
SCL	1	I/O	ACCESS.bus Clock	None	None
PB[7:0]	8	I/O	Generic I/O	D[7:0]	External Data Bus Bit 0 to 7
PC[7:0]	8	I/O	Generic I/O	D[15:8]	External Data Bus Bit 8 to 15
A[22:0]	23	Output	External Address Bus Bit 0 to 22	None	None
$\overline{\text{SEL0}}$	1	Output	Chip Select for Zone 0	None	None
$\overline{\text{SEL1}}$	1	Output	Chip Select for Zone 1	None	None
$\overline{\text{SEL2}}$	1	Output	Chip Select for Zone 2	None	None
$\overline{\text{SELIO}}$	1	Output	Chip Select for Zone I/O Zone	None	None

Name	Pins	I/O	Primary Function	Alternate Name	Alternate Function
$\overline{WR0}$	1	Output	External Memory Write Low Byte	None	None
$\overline{WR1}$	1	Output	External Memory Write High Byte	None	None
$\overline{RD}$	1	Output	External Memory Read	None	None
ENV0	1	I/O	Special mode select input with internal pull-up during reset	PLLCLK	PLL Clock Output
ENV1	1	I/O	Special mode select input with internal pull-up during reset	CPUCLK	CPU Clock Output
ENV2	1	I/O	Special mode select input with internal pull-up during reset	SLOWCLK	Slow Clock Output

Table 5 CP3BT13 Pin Descriptions for the 48-Pin CSP

Name	Pins	I/O	Primary Function	Alternate Name	Alternate Function
X1CKI	1	Input	12 MHz Oscillator Input	BBCLK	BB reference clock for the RF Interface
X1CKO	1	Output	12 MHz Oscillator Output	None	None
X2CKI	1	Input	32 kHz Oscillator Input	None	None
X2CKO	1	Output	32 kHz Oscillator Output	None	None
AVCC	1	Input	PLL Analog Power Supply	None	None
IOVCC	2	Input	2.5V - 3.3V I/O Power Supply	None	None
VCC	2	Input	2.5V Core Logic Power Supply	None	None
GND	4	Input	Reference Ground	None	None
AGND	1	Input	PLL Analog Ground	None	None
$\overline{RESET}$	1	Input	Chip general reset	None	None
TMS	1	Input	JTAG Test Mode Select (with internal weak pull-up)	None	None
TDI	1	Input	JTAG Test Data Input (with internal weak pull-up)	None	None
TDO	1	Output	JTAG Test Data Output	None	None
TCK	1	Input	JTAG Test Clock Input (with internal weak pull-up)	None	None
$\overline{RDY}$	1	Output	NEXUS Ready Output	None	None
PG0	1	I/O	Generic I/O	RXD	UART Receive Data Input
				WUI10	Multi-Input Wake-Up Channel 10
PG1	1	I/O	Generic I/O	TXD	UART Transmit Data Output
				WUI11	Multi-Input Wake-Up Channel 11
PG2	1	I/O	Generic I/O	$\overline{RTS}$	UART Ready-To-Send Output
				WUI12	Multi-Input Wake-Up Channel 12
PG3	1	I/O	Generic I/O	$\overline{CTS}$	UART Clear-To-Send Input
				WUI13	Multi-Input Wake-Up Channel 13

Name	Pins	I/O	Primary Function	Alternate Name	Alternate Function
PG5	1	I/O	Generic I/O	SRFS	AAI Receive Frame Sync
				$\overline{\text{NMI}}$	Non-Maskable Interrupt Input
PG6	1	I/O	Generic I/O	CANRX	CAN Receive Pin
				WUI14	Multi-Input Wake-Up Channel 14
PG7	1	I/O	Generic I/O	CANTX	CAN Transmit Pin
				WUI15	Multi-Input Wake-Up Channel 15
PH0	1	I/O	Generic I/O	MSK	SPI Shift Clock
				TIO1	Versatile Timer Channel 1
PH1	1	I/O	Generic I/O	MDIDO	SPI Master In Slave Out
				TIO2	Versatile Timer Channel 2
PH2	1	I/O	Generic I/O	MDODI	SPI Master Out Slave In
				TIO3	Versatile Timer Channel 3
PH3	1	I/O	Generic I/O	$\overline{\text{MWCS}}$	SPI Slave Select Input
				TIO4	Versatile Timer Channel 4
PH4	1	I/O	Generic I/O	SCK	AAI Clock
				TIO5	Versatile Timer Channel 5
PH5	1	I/O	Generic I/O	SFS	AAI Frame Synchronization
				TIO6	Versatile Timer Channel 6
PH6	1	I/O	Generic I/O	STD	AAI Transmit Data Output
				TIO7	Versatile Timer Channel 7
PH7	1	I/O	Generic I/O	SRD	AAI Receive Data Input
				TIO8	Versatile Timer Channel 8
RFDATA	1	I/O	Bluetooth RX/TX Data Pin	None	None
PI0	1	I/O	Generic I/O	RFSYNC	BT AC Correlation/TX Enable Output
PI1	1	I/O	Generic I/O	RFCE	BT RF Chip Enable Output
PI2	1	I/O	Generic I/O	BTSEQ1	Bluetooth Sequencer Status
				SRCLK	AAI Receive Clock
PI3	1	I/O	Generic I/O	SCLK	BT Serial I/F Shift Clock Output
PI4	1	I/O	Generic I/O	SDAT	BT Serial I/F Data
PI5	1	I/O	Generic I/O	$\overline{\text{SLE}}$	BT Serial I/F Load Enable Output
PI6	1	I/O	Generic I/O	WUI9	Multi-Input Wake-Up Channel 9
				BTSEQ2	Bluetooth Sequencer Status
PI7	1	I/O	Generic I/O	TA	Multi Function Timer Port A
				BTSEQ3	Bluetooth Sequencer Status
SDA	1	I/O	ACCESS.bus Serial Data	None	None
SCL	1	I/O	ACCESS.bus Clock	None	None

Name	Pins	I/O	Primary Function	Alternate Name	Alternate Function
ENV0	1	I/O	Special mode select input with internal pull-up during reset	PLLCLK	PLL Clock Output
ENV1	1	I/O	Special mode select input with internal pull-up during reset	CPUCLK	CPU Clock Output

5.0 CPU Architecture

The CP3BT13 uses the CR16C third-generation 16-bit CompactRISC processor core. The CPU implements a Reduced Instruction Set Computer (RISC) architecture that allows an effective execution rate of up to one instruction per clock cycle. For a detailed description of the CPU16C architecture, see the *CompactRISC CR16C Programmer's Reference Manual* which is available on the National Semiconductor web site (http://www.nsc.com).

The CR16C CPU core includes these internal registers:

- General-purpose registers (R0-R13, RA, and SP)
- Dedicated address registers (PC, ISP, USP, and INTBASE)
- Processor Status Register (PSR)
- Configuration Register (CFG)

The R0-R11, PSR, and CFG registers are 16 bits wide. The R12, R13, RA, SP, ISP and USP registers are 32 bits wide. The PC register is 24 bits wide. Figure 1 shows the CPU registers.

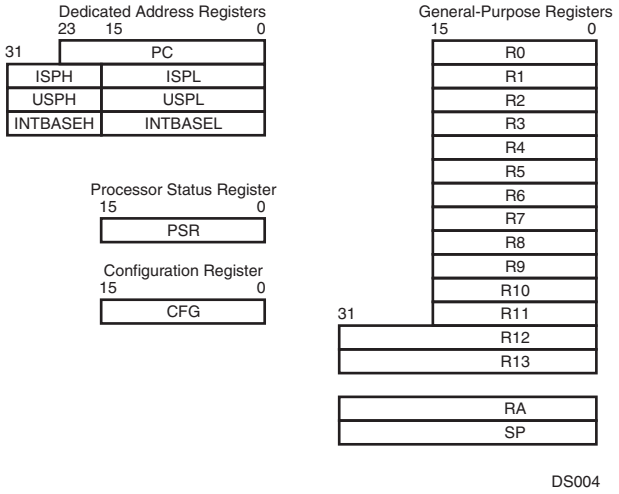

Figure 1. CPU Registers

Some register bits are designated as "reserved." Software must write a zero to these bit locations when it writes to the register. Read operations from reserved bit locations return undefined values.

5.1 GENERAL-PURPOSE REGISTERS

The CompactRISC CPU features 16 general-purpose registers. These registers are used individually as 16-bit operands or as register pairs for operations on addresses greater than 16 bits.

- General-purpose registers are defined as R0 through R13, RA, and SP.
- Registers are grouped into pairs based on the setting of the Short Register bit in the Configuration Register (CFG.SR). When the CFG.SR bit is set, the grouping of register pairs is upward-compatible with the architecture of the earlier CR16A/B CPU cores: (R1,R0), (R2,R1) ... (R11,R10), (R12_L, R11), (R13_L, R12_L), (R14_L, R13_L) and SP. (R14_L, R13_L) is the same as (RA,ERA).
- When the CFG.SR bit is clear, register pairs are grouped in the manner used by native CR16C software: (R1,R0), (R2,R1) ... (R11,R10), (R12_L, R11), R12, R13, RA, SP. R12, R13, RA, and SP are 32-bit registers for holding addresses greater than 16 bits.

With the recommended calling convention for the architecture, some of these registers are assigned special hardware and software functions. Registers R0 to R13 are for general-purpose use, such as holding variables, addresses, or index values. The SP register holds a pointer to the program runtime stack. The RA register holds a subroutine return address. The R12 and R13 registers are available to hold base addresses used in the index addressing mode.

If a general-purpose register is specified by an operation that is 8 bits long, only the lower byte of the register is used; the upper part is not referenced or modified. Similarly, for word operations on register pairs, only the lower word is used. The upper word is not referenced or modified.

5.2 DEDICATED ADDRESS REGISTERS

The CR16C has four dedicated address registers to implement specific functions: the PC, ISP, USP, and INTBASE registers.

5.2.1 Program Counter (PC) Register

The 24-bit value in the PC register points to the first byte of the instruction currently being executed. CR16C instructions are aligned to even addresses, therefore the least significant bit of the PC is always 0. At reset, the PC is initialized to 0 or an optional predetermined value. When a warm reset occurs, value of the PC prior to reset is saved in the (R1,R0) general-purpose register pair.

5.2.2 Interrupt Stack Pointer (ISP)

The 32-bit ISP register points to the top of the interrupt stack. This stack is used by hardware to service exceptions (interrupts and traps). The stack pointer may be accessed as the ISP register for initialization. The interrupt stack can be located anywhere in the CPU address space. The ISP cannot be used for any purpose other than the interrupt stack, which is used for automatic storage of the CPU registers when an exception occurs and restoration of these registers when the exception handler returns. The interrupt stack grows downward in memory. The least significant bit and the 8 most significant bits of the ISP register are always 0.

5.2.3 User Stack Pointer (USP)

The USP register points to the top of the user-mode program stack. Separate stacks are available for user and supervisor modes, to support protection mechanisms for multitasking software. The processor mode is controlled by the U bit in the PSR register (which is called PSR.U in the shorthand convention). Stack grow downward in memory. If the USP register points to an illegal address (any address greater than 0x00FF_FFFF) and the USP is used for stack access, an IAD trap is taken.

5.2.4 Interrupt Base Register (INTBASE)

The INTBASE register holds the address of the dispatch table for exceptions. The dispatch table can be located anywhere in the CPU address space. When loading the INTBASE register, bits 31 to 24 and bit 0 must written with 0.

5.3 PROCESSOR STATUS REGISTER (PSR)

The PSR provides state information and controls operating modes for the CPU. The format of the PSR is shown below.

15 12	11	10	9	8	7	6	5	4	3	2	1	0
Reserved	I	P	E	0	N	Z	F	0	U	L	T	C

C — The Carry bit indicates whether a carry or borrow occurred after addition or subtraction.
0 – No carry or borrow occurred.
1 – Carry or borrow occurred.

T — The Trace bit enables execution tracing, in which a Trace trap (TRC) is taken after every instruction. Tracing is automatically disabled during the execution of an exception handler.
0 – Tracing disabled.
1 – Tracing enabled.

L — The Low bit indicates the result of the last comparison operation, with the operands interpreted as unsigned integers.
0 – Second operand greater than or equal to first operand.
1 – Second operand less than first operand.

U — The User Mode bit controls whether the CPU is in user or supervisor mode. In supervisor mode, the SP register is used for stack operations. In user mode, the USP register is used instead. User mode is entered by executing the Jump USR instruction. When an exception is taken, the exception handler automatically begins execution in supervisor mode. The USP register is accessible using the Load Processor Register (LPR/LPRD) instruction in supervisor mode. In user mode, an attempt to access the USP register generates a UND trap.
0 – CPU is executing in supervisor mode.
1 – CPU is executing in user mode.

F — The Flag bit is a general condition flag for signalling exception conditions or distinguishing the results of an instruction, among other thing uses. For example, integer arithmetic instructions use the F bit to indicate an overflow condition after an addition or subtraction operation.

Z — The Zero bit is used by comparison operations. In a comparison of integers, the Z bit is set if the two operands are equal. If the operands are unequal, the Z bit is cleared.
0 – Source and destination operands unequal.
1 – Source and destination operands equal.

N — The Negative bit indicates the result of the last comparison operation, with the operands interpreted as signed integers.
0 – Second operand greater than or equal to first operand.
1 – Second operand less than first operand.

E — The Local Maskable Interrupt Enable bit enables or disables maskable interrupts. If this bit and the Global Maskable Interrupt Enable (I) bit are both set, all interrupts are enabled. If either of these bits is clear, only the non-maskable interrupt is enabled. The E bit is set by the Enable Interrupts (EI) instruction and cleared by the Disable Interrupts (DI) instruction.
0 – Maskable interrupts disabled.
1 – Maskable interrupts enabled.

P — The Trace Trap Pending bit is used together with the Trace (T) bit to prevent a Trace (TRC) trap from occurring more than once for one instruction. At the beginning of the execution of an instruction, the state of the T bit is copied into the P bit. If the P bit remains set at the end of the instruction execution, the TRC trap is taken.
0 – No trace trap pending.
1 – Trace trap pending.

I — The Global Maskable Interrupt Enable bit is used to enable or disable maskable interrupts. If this bit and the Local Maskable Interrupt Enable (E) bit are both set, all maskable interrupts are taken. If either bit is clear, only the non-maskable interrupt is taken. Unlike the E bit, the I bit is automatically cleared when an interrupt occurs and automatically set upon completion of an interrupt handler.
0 – Maskable interrupts disabled.
1 – Maskable interrupts enabled.

Bits Z, C, L, N, and F of the PSR are referenced from assembly language by the condition code in conditional branch instructions. A conditional branch instruction may cause a branch in program execution, based on the value of one or more of these PSR bits. For example, one of the Bcond instructions, BEQ (Branch EQual), causes a branch if the PSR.Z bit is set.

On reset, bits 0 through 11 of the PSR are cleared, except for the PSR.E bit, which is set. On warm reset, the values of each bit before reset are copied into the R2 general-purpose register. Bits 4 and 8 of the PSR have a constant value of 0. Bits 12 through 15 are reserved. In general, status bits are modified only by specific instructions. Otherwise, status bits maintain their values throughout instructions which do not implicitly affect them.

5.4 CONFIGURATION REGISTER (CFG)

The CFG register is used to enable or disable various operating modes and to control optional on-chip caches. Because the CP3BT13 does not have cache memory, the cache control bits in the CFG register are reserved. All CFG bits are cleared on reset.

15 – 10	9	8	7	6	5 – 2	1	0
Reserved	SR	ED	0	0	Reserved	0	0

ED — The Extended Dispatch bit selects whether the size of an entry in the interrupt dispatch table (IDT) is 16 or 32 bits. Each entry holds the address of the appropriate exception handler. When the IDT has 16-bit entries, and all exception handlers must reside in the first 128K of the address space. The location of the IDT is held in the INTBASE register, which is not affected by the state of the ED bit.
0 – Interrupt dispatch table has 16-bit entries.
1 – Interrupt dispatch table has 32-bit entries.

SR — The Short Register bit enables a compatibility mode for the CR16B large model. In the CR16C core, registers R12, R13, and RA are extended to 32 bits. In the CR16B large model, only the lower 16 bits of these registers are used, and these “short registers” are paired together for 32-bit operations. In this mode, the (RA, R13) register pair is used as the extended RA register, and address displacements relative to a single register are supported with offsets of 0 and 14 bits in place of the index addressing with these displacements.
0 – 32-bit registers are used.
1 – 16-bit registers are used (CR16B mode).

5.5 ADDRESSING MODES

The CR16C CPU core implements a load/store architecture, in which arithmetic and logical instructions operate on register operands. Memory operands are made accessible in registers using load and store instructions. For efficient implementation of I/O-intensive embedded applications, the architecture also provides a set of bit operations that operate on memory operands.

The load and store instructions support these addressing modes: register/pair, immediate, relative, absolute, and index addressing. When register pairs are used, the lower bits are in the lower index register and the upper bits are in the higher index register. When the CFG.SR bit is clear, the 32-bit registers R12, R13, RA, and SP are also treated as register pairs.

References to register pairs in assembly language use parentheses. With a register pair, the lower numbered register pair must be on the right. For example,

jump (r5, r4)

load $4(r4,r3), (r6,r5)

load $5(r12), (r13)

The instruction set supports the following addressing modes:

Register/Pair Mode In register/pair mode, the operand is held in a general-purpose register, or in a general-purpose register pair. For example, the following instruction adds the contents of the low byte of register r1 to the contents of the low byte of r2, and places the result in the low byte register r2. The high byte of register r2 is not modified.

ADDB R1, R2

Immediate Mode In immediate mode, the operand is a constant value which is encoded in the instruction. For example, the following instruction multiplies the value of r4 by 4 and places the result in r4.

MULW $4, R4

Relative Mode In relative mode, the operand is addressed using a relative value (displacement) encoded in the instruction. This displacement is relative to the current Program Counter (PC), a general-purpose register, or a register pair.

In branch instructions, the displacement is always relative to the current value of the PC Register. For example, the following instruction causes an unconditional branch to an address 10 ahead of the current PC.

BR *+10

In another example, the operand resides in memory. Its address is obtained by adding a displacement encoded in the instruction to the contents of register r5. The address calculation does not modify the contents of register r5.

LOADW 12(R5), R6

The following example calculates the address of a source operand by adding a displacement of 4 to the contents of a register pair (r5, r4) and loads this operand into the register pair (r7, r6). r7 receives the high word of the operand, and r6 receives the low word.

LOADD 4(r5, r4), (r7, r6)

Index Mode In index mode, the operand address is calculated with a base address held in either R12 or R13. The CFG.SR bit must be clear to use this mode.

- For relative mode operands, the memory address is calculated by adding the value of a register pair and a displacement to the base address. The displacement can be a 14 or 20-bit unsigned value, which is encoded in the instruction.
- For absolute mode operands, the memory address is calculated by adding a 20-bit absolute address encoded in the instruction to the base address.

In the following example, the operand address is the sum of the displacement 4, the contents of the register pair (r5,r4), and the base address held in register r12. The word at this address is loaded into register r6.

LOADW [r12]4(r5, r4), r6

Absolute Mode In absolute mode, the operand is located in memory, and its address is encoded in the instruction (normally 20 or 24 bits). For example, the following instruction loads the byte at address 4000 into the lower 8 bits of register r6.

LOADB 4000, r6

For additional information on the addressing modes, see the CompactRISC CR16C Programmer's Reference Manual.

5.6 STACKS

A stack is a last-in, first-out data structure for dynamic storage of data and addresses. A stack consists of a block of memory used to hold the data and a pointer to the top of the stack. As more data is pushed onto a stack, the stack grows downward in memory. The CR16C supports two types of stacks: the interrupt stack and program stacks.

5.6.1 Interrupt Stack

The processor uses the interrupt stack to save and restore the program state during the exception handling. Hardware automatically pushes this data onto the interrupt stack before entering an exception handler. When the exception handler returns, hardware restores the processor state with data popped from the interrupt stack. The interrupt stack pointer is held in the ISP register.

5.6.2 Program Stack

The program stack is normally used by software to save and restore register values on subroutine entry and exit, hold local and temporary variables, and hold parameters passed between the calling routine and the subroutine. The only hardware mechanisms which operate on the program stack are the PUSH, POP, and POPRET instructions.

5.6.3 User and Supervisor Stack Pointers

To support multitasking operating systems, support is provided for two program stack pointers: a user stack pointer and a supervisor stack pointer. When the PSR.U bit is clear, the SP register is used for all program stack operations. This is the default mode when the user/supervisor protection mechanism is not used, and it is the supervisor mode when protection is used.

When the PSR.U bit is set, the processor is in user mode, and the USP register is used as the program stack pointer. User mode can only be entered using the JUSR instruction, which performs a jump and sets the PSR.U bit. User mode is exited when an exception is taken and re-entered when the exception handler returns. In user mode, the LPRD instruction cannot be used to change the state of processor registers (such as the PSR).

5.7 INSTRUCTION SET

Table 6 lists the operand specifiers for the instruction set, and Table 7 is a summary of all instructions. For each instruction, the table shows the mnemonic and a brief description of the operation performed.

In the mnemonic column, the lower-case letter “i” is used to indicate the type of integer that the instruction operates on, either “B” for byte or “W” for word. For example, the notation ADDi for the “add” instruction means that there are two forms of this instruction, ADDB and ADDW, which operate on bytes and words, respectively.

Similarly, the lower-case string “cond” is used to indicate the type of condition tested by the instruction. For example, the notation Jcond represents a class of conditional jump instructions: JEQ for Jump on Equal, JNE for Jump on Not Equal, etc. For detailed information on all instructions, see the *CompactRISC CR16C Programmer's Reference Manual*.

Table 6 Key to Operand Specifiers

Operand Specifier	Description
abs	Absolute address
disp	Displacement (numeric suffix indicates number of bits)
imm	Immediate operand (numeric suffix indicates number of bits)
Iposition	Bit position in memory
Rbase	Base register (relative mode)
Rdest	Destination register
Rindex	Index register
RPbase, RPbasex	Base register pair (relative mode)
RPdest	Destination register pair
RPlink	Link register pair
Rposition	Bit position in register
Rproc	16-bit processor register
Rprocd	32-bit processor register
RPsrc	Source register pair
RPtarget	Target register pair
Rsrc, Rsrc1, Rsrc2	Source register

Table 7 Instruction Set Summary

Mnemonic	Operands	Description
MOVi	Rsrc/imm, Rdest	Move
MOVXB	Rsrc, Rdest	Move with sign extension
MOVZB	Rsrc, Rdest	Move with zero extension
MOVXW	Rsrc, RPdest	Move with sign extension
MOVZW	Rsrc, RPdest	Move with zero extension
MOVD	imm, RPdest	Move immediate to register-pair
	RPsrc, RPdest	Move between register-pairs
ADD[U]i	Rsrc/imm, Rdest	Add
ADDCi	Rsrc/imm, Rdest	Add with carry
ADDD	RPsrc/imm, RPdest	Add with RP or immediate.
MACQWa	Rsrc1, Rsrc2, RPdest	Multiply signed Q15: RPdest := RPdest + (Rsrc1 × Rsrc2)
MACSWa	Rsrc1, Rsrc2, RPdest	Multiply signed and add result: RPdest := RPdest + (Rsrc1 × Rsrc2)
MACUWa	Rsrc1, Rsrc2, RPdest	Multiply unsigned and add result: RPdest := RPdest + (Rsrc1 × Rsrc2)
MULi	Rsrc/imm, Rdest	Multiply: Rdest(8) := Rdest(8) × Rsrc(8)/imm Rdest(16) := Rdest(16) × Rsrc(16)/imm
MULSB	Rsrc, Rdest	Multiply: Rdest(16) := Rdest(8) × Rsrc(8)
MULSW	Rsrc, RPdest	Multiply: RPdest := RPdest(16) × Rsrc(16)
MULUW	Rsrc, RPdest	Multiply: RPdest := RPdest(16) × Rsrc(16);
SUBi	Rsrc/imm, Rdest	Subtract: (Rdest := Rdest - Rsrc/imm)
SUBD	RPsrc/imm, RPdest	Subtract: (RPdest := RPdest - RPsrc/imm)
SUBCi	Rsrc/imm, Rdest	Subtract with carry: (Rdest := Rdest - Rsrc/imm)
CMPi	Rsrc/imm, Rdest	Compare Rdest - Rsrc/imm
CMPD	RPsrc/imm, RPdest	Compare RPdest - RPsrc/imm
BEQ0i	Rsrc, disp	Compare Rsrc to 0 and branch if EQUAL
BNE0i	Rsrc, disp	Compare Rsrc to 0 and branch if NOT EQUAL
ANDi	Rsrc/imm, Rdest	Logical AND: Rdest := Rdest & Rsrc/imm
ANDD	RPsrc/imm, RPdest	Logical AND: RPdest := RPsrc & RPsrc/imm
ORi	Rsrc/imm, Rdest	Logical OR: Rdest := Rdest | Rsrc/imm
ORD	RPsrc/imm, RPdest	Logical OR: Rdest := RPdest | RPsrc/imm
Scond	Rdest	Save condition code as boolean
XORi	Rsrc/imm, Rdest	Logical exclusive OR: Rdest := Rdest ^ Rsrc/imm
XORD	RPsrc/imm, RPdest	Logical exclusive OR: Rdest := RPdest ^ RPsrc/imm
ASHUi	Rsrc/imm, Rdest	Arithmetic left/right shift

Table 7 Instruction Set Summary

Mnemonic	Operands	Description
ASHUD	Rsrc/imm, RPdest	Arithmetic left/right shift
LSHi	Rsrc/imm, Rdest	Logical left/right shift
LSHD	Rsrc/imm, RPdest	Logical left/right shift
SBITi	Iposition, disp(Rbase)	Set a bit in memory (Because this instruction treats the destination as a read-modify-write operand, it not be used to set bits in write-only registers.)
	Iposition, disp(RPbase)	
	Iposition, (Rindex)disp(RPbasex)	
	Iposition, abs	
	Iposition, (Rindex)abs	
CBITi	Iposition, disp(Rbase)	Clear a bit in memory
	Iposition, disp(RPbase)	
	Iposition, (Rindex)disp(RPbasex)	
	Iposition, abs	
	Iposition, (Rindex)abs	
TBIT TBITi	Rposition/imm, Rsrc	Test a bit in a register Test a bit in memory
	Iposition, disp(Rbase)	
	Iposition, disp(RPbase)	
	Iposition, (Rindex)disp(RPbasex)	
	Iposition, abs	
	Iposition, (Rindex)abs	
LPR	Rsrc, Rproc	Load processor register
LPRD	RPsrc, Rprocd	Load double processor register
SPR	Rproc, Rdest	Store processor register
SPRD	Rprocd, RPdest	Store 32-bit processor register
Bcond	disp9	Conditional branch
	disp17	
	disp24	
BAL	RPlink, disp24	Branch and link
BR	disp9	Branch
	disp17	
	disp24	
EXCP	vector	Trap (vector)
Jcond	RPtarget	Conditional Jump to a large address
JAL	RA, RPtarget,	Jump and link to a large address
	RPlink, RPtarget	
JUMP	RPtarget	Jump
JUSR	RPtarget	Jump and set PSR.U

Table 7 Instruction Set Summary

Mnemonic	Operands	Description
RETX		Return from exception
PUSH	imm, Rsrc, RA	Push “imm” number of registers on user stack, starting with Rsrc and possibly including RA
POP	imm, Rdest, RA	Restore “imm” number of registers from user stack, starting with Rdest and possibly including RA
POPRET	imm, Rdest, RA	Restore registers (similar to POP) and JUMP RA
LOADi	disp(Rbase), Rdest	Load (register relative)
	abs, Rdest	Load (absolute)
	(Rindex)abs, Rdest	Load (absolute index relative)
	(Rindex)disp(RPbasex), Rdest	Load (register relative index)
	disp(RPbase), Rdest	Load (register pair relative)
LOADD	disp(Rbase), Rdest	Load (register relative)
	abs, Rdest	Load (absolute)
	(Rindex)abs, Rdest	Load (absolute index relative)
	(Rindex)disp(RPbasex), Rdest	Load (register pair relative index)
	disp(RPbase), Rdest	Load (register pair relative)
STORi	Rsrc, disp(Rbase)	Store (register relative)
	Rsrc, disp(RPbase)	Store (register pair relative)
	Rsrc, abs	Store (absolute)
	Rsrc, (Rindex)disp(RPbasex)	Store (register pair relative index)
	Rsrc, (Rindex)abs	Store (absolute index)
STORD	RPsrc, disp(Rbase)	Store (register relative)
	RPsrc, disp(RPbase)	Store (register pair relative)
	RPsrc, abs	Store (absolute)
	RPsrc, (Rindex)disp(RPbasex)	Store (register pair index relative)
	RPsrc, (Rindex)abs	Store (absolute index relative)
STOR IMM	imm4, disp(Rbase)	Store unsigned 4-bit immediate value extended to operand length in memory
	imm4, disp(RPbase)	
	imm4, (Rindex)disp(RPbasex)	
	imm4, abs	
	imm4, (Rindex)abs	
LOADM	imm3	Load 1 to 8 registers (R2-R5, R8-R11) from memory starting at (R0)
LOADMP	imm3	Load 1 to 8 registers (R2-R5, R8-R11) from memory starting at (R1, R0)
STORM	STORM imm3	Store 1 to 8 registers (R2-R5, R8-R11) to memory starting at (R2)

Table 7 Instruction Set Summary

Mnemonic	Operands	Description
STORMP	imm3	Store 1 to 8 registers (R2-R5, R8-R11) to memory starting at (R7,R6)
DI		Disable maskable interrupts
EI		Enable maskable interrupts
EIWAIT		Enable maskable interrupts and wait for interrupt
NOP		No operation
WAIT		Wait for interrupt

6.0 Memory

The CP3BT13 supports a uniform 16M-byte linear address space. Table 8 lists the types of memory and peripherals that occupy this memory space. Unlisted address ranges are reserved and must not be read or written. The BIU zones are regions of the address space that share the same control bits in the Bus Interface Unit (BIU).

Table 8 CP3BT13 Memory Map

Start Address	End Address	Size in Bytes	Description	BIU Zone
00 0000h	03 FFFFh	256K	On-chip Flash Program Memory, including Boot Memory	Static Zone 0 (mapped internally in IRE and ERE mode; mapped to the external bus in DEV mode)
04 0000h	0D FFFFh	640K	Reserved	
0E 0000h	0E 1FFFh	8K	On-chip Flash Data Memory	
0E 2000h	0E 7FFFh	24K	Reserved	
0E 8000h	0E 91FFh	4.5K	Bluetooth Data RAM	N/A
0E 9200h	0E BFFFh	11.5K	Reserved	
0E C000h	0E E7FFh	10K	System RAM	
0E E800h	0E EBFFh	1K	Bluetooth Lower Link Controller Sequencer RAM	
0E EC00h	0E EFFFh	1K	Reserved	
0E F000h	0E F13Fh	320	CAN Buffers and Registers	
0E F140h	0E F17Fh	64	Reserved	
0E F180h	0E F1FFh	128	Bluetooth Lower Link Controller Registers	
0E F200h	0F FFFFh	67.5K	Reserved	
10 0000h	3F FFFFh	3072K	Reserved	
40 0000h	7F FFFFh	4096K	External Memory Zone 1	Static Zone 1
80 0000h	FE FFFFh	8128K	External Memory Zone 2	Static Zone 2
FF 0000h	FF FAFFh	64256	BIU Peripherals	
FF FB00h	FF FBFFh	256	I/O Expansion	I/O Zone
FF FC00h	FF FFFFh	1K	Peripherals and Other I/O Ports	N/A

6.1 OPERATING ENVIRONMENT

The operating environment controls whether external memory is supported and whether the reset vector jumps to a code space intended to support In-System Programming (ISP). Up to 12M of external memory space is available.

The operating mode of the device is controlled by the states on the ENV[2:0] pins at reset and the states of the EMPTY bits in the Protection Word, as shown in Table 9. Internal pullups on the ENV[2:0] pins select IRE mode or ISP mode if these pins are allowed to float.

When ENV[2:0] = 111b, IRE mode is selected unless the EMPTY bits in the Protection word indicate that the program flash memory is empty (unprogrammed), in which case ISP mode is selected. When ENV[2:0] = 011b, ERE mode is selected unless the EMPTY bits indicate that the program flash memory is empty, in which case ISP mode is selected. When ENV[2:0] = 110b, ISP mode is selected without regard to the states of the EMPTY bits. See Section 8.4.2 for more details.

In the DEV environment, the on-chip flash memory is disabled, and the corresponding region of the address space is mapped to external memory.

Table 9 Operating Environment Selection

ENV[2:0]	EMPTY	Operating Environment
111	No	Internal ROM enabled (IRE) mode
011	No	External ROM enabled (ERE) mode
000	N/A	Development (DEV) mode
110	N/A	In-System-Programming (ISP) mode
111	Yes	In-System-Programming (ISP) mode
011	Yes	In-System-Programming (ISP) mode

6.2 BUS INTERFACE UNIT (BIU)

The BIU controls the interface between the CPU core bus and those on-chip modules which are mapped into BIU zones. These on-chip modules are the flash program memory and the I/O zone. The BIU controls the configured parameters for bus access (such as the number of wait states for memory access) and issues the appropriate bus signals for the requested access.

6.3 BUS CYCLES

There are four types of data transfer bus cycles:

- Normal read
- Fast read
- Early write
- Late write

The type of data cycle used in a particular transaction depends on the type of CPU operation (a write or a read), the type of memory or I/O being accessed, and the access type programmed into the BIU control registers (early/late write or normal/fast read).

For read operations, a basic normal read takes two clock cycles, and a fast-read bus cycle takes one clock cycle. Normal read bus cycles are enabled by default after reset.

For write operations, a basic late-write bus cycle takes two clock cycles, and a basic early-write bus cycle takes three clock cycles. Early-write bus cycles are enabled by default after reset. However, late-write bus cycles are needed for ordinary write operations, so this configuration must be changed by software (see Section 6.4.1).

In certain cases, one or more additional clock cycles are added to a bus access cycle. There are two types of additional clock cycles for ordinary memory accesses, called internal wait cycles (TIW) and hold (T_{hold}) cycles.

A wait cycle is inserted in a bus cycle just after the memory address has been placed on the address bus. This gives the accessed memory more time to respond to the transaction request.

A hold cycle is inserted at the end of a bus cycle. This holds the data on the data bus for an extended number of clock cycles.

6.4 BIU CONTROL REGISTERS

The BIU has a set of control registers that determine how many wait cycles and hold cycles are to be used for accessing memory. During initialization of the system, these registers should be programmed with appropriate values so that the minimum allowable number of cycles is used. This number varies with the clock frequency.

There are five BIU control registers, as listed in Table 10. These registers control the bus cycle configuration used for accessing the various on-chip memory types.

Table 10 Bus Control Registers

Name	Address	Description
BCFG	FF F900h	BIU Configuration Register
IOCFG	FF F902h	I/O Zone Configuration Register
SZCFG0	FF F904h	Static Zone 0 Configuration Register
SZCFG1	FF F906h	Static Zone 1 Configuration Register
SZCFG2	FF F908h	Static Zone 2 Configuration Register

6.4.1 BIU Configuration Register (BCFG)

The BCFG register is a byte-wide, read/write register that selects early-write or late-write bus cycles. At reset, the register is initialized to 07h. The register format is shown below.

7 – 3	2	1	0
Reserved	1	1	EWR

EWR The Early Write bit controls write cycle timing.
0 – Late-write operation (2 clock cycles to write).
1 – Early-write operation.

At reset, the BCFG register is initialized to 07h, which selects early-write operation. However, late-write operation is required for normal device operation, so software must change the register value to 06h. Bits 1 and 2 of this register must always be set when writing to this register.

6.4.2 I/O Zone Configuration Register (IOCFG)

The IOCFG register is a word-wide, read/write register that controls the timing and bus characteristics of accesses to the 256-byte I/O Zone memory space (FF FB00h to FF FBFFh). The registers associated with Port B and Port C reside in the I/O memory array. At reset, the register is initialized to 069Fh. The register format is shown below.

7	6	5	4	3	2	0
BW	Reserved		HOLD		WAIT	

15	10	9	8
Reserved		IPST	Res.

WAIT — The Memory Wait Cycles field specifies the number of TIW (internal wait state) clock cycles added for each memory access, ranging from 000 binary for no additional TIW wait cycles to 111 binary for seven additional TIW wait cycles.

HOLD — The Memory Hold Cycles field specifies the number of T_{hold} clock cycles used for each memory access, ranging from 00b for no T_{hold} cycles to 11b for three T_{hold} clock cycles.

BW — The Bus Width bit defines the bus width of the IO Zone.
0 – 8-bit bus width.
1 – 16-bit bus width (default)

IPST — The Post Idle bit controls whether an idle cycle follows the current bus cycle, when the next bus cycle accesses a different zone. No idle cycles are required for on-chip accesses.
0 – No idle cycle (recommended).
1 – Idle cycle.

6.4.3 Static Zone 0 Configuration Register (SZCFG0)

The SZCFG0 register is a word-wide, read/write register that controls the timing and bus characteristics of Zone 0 memory accesses. Zone 0 is used for the on-chip flash memory (including the boot area, program memory, and data memory).

At reset, the register is initialized to 069Fh. The register format is shown below.

7	6	5	4	3	2	0
BW	WBR	RBE	HOLD		WAIT	

15	12	11	10	9	8
Reserved		FRE	IPRE	IPST	Res.

WAIT — The Memory Wait field specifies the number of TIW (internal wait state) clock cycles added for each memory access, ranging from 000b for no additional TIW wait cycles to 111b for seven additional TIW wait cycles. These bits are ignored if the SZCFG0.FRE bit is set.

HOLD — The Memory Hold field specifies the number of T_{hold} clock cycles used for each memory access, ranging from 00b for no T_{hold} cycles to 11b for three T_{hold} clock cycles. These bits are ignored if the SZCFG0.FRE bit is set.

RBE — The Read Burst Enable enables burst cycles on 16-bit reads from 8-bit bus width regions of the address space. Because the flash program memory is required to be 16-bit bus width, the RBE bit is a don't care bit. This bit is ignored when the SZCFG0.FRE bit is set.
0 – Burst read disabled.
1 – Burst read enabled.

WBR — The Wait on Burst Read bit controls if a wait state is added on burst read transaction. This bit is ignored, when SZCFG0.FRE bit is set or when SZCFG0.RBE is clear.
0 – No TBW on burst read cycles.
1 – One TBW on burst read cycles.

BW — The Bus Width bit controls the bus width of the zone. The flash program memory must be configured for 16-bit bus width.
0 – 8-bit bus width.
1 – 16-bit bus width (required).

FRE — The Fast Read Enable bit controls whether fast read bus cycles are used. A fast read operation takes one clock cycle. A normal read operation takes at least two clock cycles.
0 – Normal read cycles.
1 – Fast read cycles.

IPST — The Post Idle bit controls whether an idle cycle follows the current bus cycle, when the next bus cycle accesses a different zone. No idle cycles are required for on-chip accesses.
0 – No idle cycle (recommended).
1 – Idle cycle inserted.

IPRE — The Preliminary Idle bit controls whether an idle cycle is inserted prior to the current bus cycle, when the new bus cycle accesses a different zone. No idle cycles are required for on-chip accesses.
0 — No idle cycle (recommended).
1 — Idle cycle inserted.

6.4.4 Static Zone 1 Configuration Register (SZCFG1)

The SZCFG1 register is a word-wide, read/write register that controls the timing and bus characteristics for off-chip accesses selected with the $\overline{SEL1}$ output signal.

At reset, the register is initialized to 069Fh. The register format is shown below.

7	6	5	4	3	2	0
BW	WBR	RBE	HOLD		WAIT	

15	12	11	10	9	8
Reserved		FRE	IPRE	IPST	Res.

WAIT — The Memory Wait field specifies the number of TIW (internal wait state) clock cycles added for each memory access, ranging from 000b for no additional TIW wait cycles to 111b for seven additional TIW wait cycles. These bits are ignored if the SZCFG1.FRE bit is set.

HOLD — The Memory Hold field specifies the number of T_{hold} clock cycles used for each memory access, ranging from 00b for no T_{hold} cycles to 11b for three T_{hold} clock cycles. These bits are ignored if the SZCFG1.FRE bit is set.

RBE — The Read Burst Enable enables burst cycles on 16-bit reads from 8-bit bus width regions of the address space. This bit is ignored when the SZCFG1.FRE bit is set or the SZCFG1.BW is clear.
0 — Burst read disabled.
1 — Burst read enabled.

WBR — The Wait on Burst Read bit controls if a wait state is added on burst read transaction. This bit is ignored, when SZCFG1.FRE bit is set or when SZCFG1.RBE is clear.
0 — No TBW on burst read cycles.
1 — One TBW on burst read cycles.

BW — The Bus Width bit controls the bus width of the zone.
0 — 8-bit bus width.
1 — 16-bit bus width.

FRE — The Fast Read Enable bit controls whether fast read bus cycles are used. A fast read operation takes one clock cycle. A normal read operation takes at least two clock cycles.
0 — Normal read cycles.
1 — Fast read cycles.

IPST — The Post Idle bit controls whether an idle cycle follows the current bus cycle, when the next bus cycle accesses a different zone.
0 — No idle cycle.
1 — Idle cycle inserted.

IPRE — The Preliminary Idle bit controls whether an idle cycle is inserted prior to the current bus cycle, when the new bus cycle accesses a different zone.
0 — No idle cycle.
1 — Idle cycle inserted.

6.4.5 Static Zone 2 Configuration Register (SZCFG2)

The SZCFG2 register is a word-wide, read/write register that controls the timing and bus characteristics for off-chip accesses selected with the $\overline{SEL2}$ output signal.

At reset, the register is initialized to 069Fh. The register format is shown below.

7	6	5	4	3	2	0
BW	WBR	RBE	HOLD		WAIT	

15	12	11	10	9	8
Reserved		FRE	IPRE	IPST	Res.

WAIT — The Memory Wait field specifies the number of TIW (internal wait state) clock cycles added for each memory access, ranging from 000b for no additional TIW wait cycles to 111b for seven additional TIW wait cycles. These bits are ignored if the SZCFG2.FRE bit is set.

HOLD — The Memory Hold field specifies the number of T_{hold} clock cycles used for each memory access, ranging from 00b for no T_{hold} cycles to 11b for three T_{hold} clock cycles. These bits are ignored if the SZCFG2.FRE bit is set.

RBE — The Read Burst Enable enables burst cycles on 16-bit reads from 8-bit bus width regions of the address space. This bit is ignored when the SZCFG2.FRE bit is set or the SZCFG2.BW is clear.
0 – Burst read disabled.
1 – Burst read enabled.

WBR — The Wait on Burst Read bit controls if a wait state is added on burst read transaction. This bit is ignored, when SZCFG2.FRE bit is set or when SZCFG2.RBE is clear.
0 – No TBW on burst read cycles.
1 – One TBW on burst read cycles.

BW — The Bus Width bit controls the bus width of the zone.
0 – 8-bit bus width.
1 – 16-bit bus width.

FRE — The Fast Read Enable bit controls whether fast read bus cycles are used. A fast read operation takes one clock cycle. A normal read operation takes at least two clock cycles.
0 – Normal read cycles.
1 – Fast read cycles.

IPST — The Post Idle bit controls whether an idle cycle follows the current bus cycle, when the next bus cycle accesses a different zone.
0 – No idle cycle.
1 – Idle cycle inserted.

IPRE — The Preliminary Idle bit controls whether an idle cycle is inserted prior to the current bus cycle, when the new bus cycle accesses a different zone.
0 – No idle cycle.
1 – Idle cycle inserted.

6.5 WAIT AND HOLD STATES

The number of wait cycles and hold cycles inserted into a bus cycle depends on whether it is a read or write operation, the type of memory or I/O being accessed, and the control register settings.

6.5.1 Flash Program/Data Memory

When the CPU accesses the Flash program and data memory (address ranges 000000h–03FFFFh and 0E0000h–0E1FFFh), the number of added wait and hold cycles depends on the type of access and the BIU register settings.

In fast-read mode (SZCFG0.FRE=1), a read operation is a single cycle access. This limits the maximum CPU operating frequency to 24 MHz.

For a read operation in normal-read mode (SZCFG0.FRE=0), the number of inserted wait cycles is specified in the SZCFG0.WAIT field. The total number of wait cycles is the value in the WAIT field plus 1, so it can range from 1 to 8. The number of inserted hold cycles is specified in the SCCFG0.HOLD field, which can range from 0 to 3.

For a write operation in fast read mode (SZCFG0.FRE=1), the number of inserted wait cycles is 1. No hold cycles are used.

For a write operation normal read mode (SZCFG0.FRE=0), the number of wait cycles is equal to the value written to the SZCFG0.WAIT field plus 1 (in the late write mode) or 2 (in the early write mode). The number of inserted hold cycles is equal to the value written to the SCCFG0.HOLD field, which can range from 0 to 3.

6.5.2 RAM Memory

Read and write accesses to on-chip RAM is performed within a single cycle, without regard to the BIU settings. The RAM address is in the range of 0E 8000h–0E 91FFh and 0E C000h–0E EBFFh.

6.5.3 Access to Peripherals

When the CPU accesses on-chip peripherals in the range of 0E F000h–0E F1FFh and FF 0000h–FF FBFFh, one wait cycle and one preliminary idle cycle is used. No hold cycles are used. The IOCFG register determines the access timing for the address range FF FB00h–FF FBFFh.

7.0 System Configuration Registers

The system configuration registers control and provide status for certain aspects of device setup and operation, such as indicating the states sampled from the ENV[2:0] inputs. The system configuration registers are listed in Table 11.

Table 11 System Configuration Registers

Name	Address	Description
MCFG	FF F910h	Module Configuration Register
MSTAT	FF F914h	Module Status Register

7.1 MODULE CONFIGURATION REGISTER (MCFG)

The MCFG register is a byte-wide, read/write register that selects the clock output features of the device.

The register must be written in active mode only, not in power save, HALT, or IDLE mode. However, the register contents are preserved during all power modes.

The MCFG register format is shown below.

7	6	5	4	3	2	1	0
Res.	MEM_IO _SPEED	MISC_IO _SPEED	Reserved	SCLK OE	MCLK OE	PLLCLK OE	EXI OE

EXIOE The EXIOE bit controls whether the external bus is enabled in the IRE environment for implementing the I/O Zone (FF FB00h–FF FBFFh).
0 – External bus disabled.
1 – External bus enabled.

PLLCLKOE The PLLCLKOE bit controls whether the PLL clock is driven on the ENV0/PLLCLK pin.
0 – ENV0/PLLCLK pin is high impedance.
1 – PLL clock driven on the ENV0/PLLCLK pin.

MCLKOE The MCLKOE bit controls whether the Main Clock is driven on the ENV1/CPUCLK pin.
0 – ENV1/CPUCLK pin is high impedance.
1 – Main Clock is driven on the ENV1/CPUCLK pin.

SCLKOE The SCLKOE bit controls whether the Slow Clock is driven on the ENV2/SLOWCLK pin.
0 – ENV2/SLOWCLK pin is high impedance.
1 – Slow Clock is driven on the ENV2/SLOWCLK pin.

MISC_IO_SPEED The MISC_IO_SPEED bit controls the slew rate of the output drivers for the ENV[2:0], $\overline{\text{RDY}}$, RFDATA, and TDO pins. To minimize noise, the slow slew rate is recommended.
0 – Fast slew rate.
1 – Slow slew rate.

MEM_IO_SPEED The MEM_IO_SPEED bit controls the slew rate of the output drivers for the A[22:0], $\overline{\text{RD}}$, $\overline{\text{SEL[2:1]}}$, and $\overline{\text{WR[1:0]}}$ pins. Memory speeds for the CP3BT13 are characterized with fast slew rate. Slow slew rate reduces the available memory access time by 5 ns.
0 – Fast slew rate.
1 – Slow slew rate.

7.2 MODULE STATUS REGISTER (MSTAT)

The MSTAT register is a byte-wide, read-only register that indicates the general status of the device. The MSTAT register format is shown below.

7 5	4	3	2	1	0
Reserved	DPGMBUSY	PGMBUSY	OENV2	OENV1	OENV0

OENV[2:0] The Operating Environment bits hold the states sampled from the ENV[2:0] input pins at reset. These states are controlled by external hardware at reset and are held constant in the register until the next reset.

PGMBUSY The Flash Programming Busy bit is automatically set when either the program memory or the data memory is being programmed or erased. It is clear when neither of the memories is busy. When this bit is set, software must not attempt to program or erase either of these two memories. This bit is a copy of the FMBUSY bit in the FMSTAT register.
0 – Flash memory is not busy.
1 – Flash memory is busy.

DPGMBUSY The Data Flash Programming Busy indicates that the flash data memory is being erased or a pipelined programming sequence is currently ongoing. Software must not attempt to perform any write access to the flash program memory at this time, without also polling the FSMSTAT.FMFULL bit in the flash memory interface. The DPGMBUSY bit is a copy of the FMBUSY bit in the FSMSTAT register.
0 – Flash data memory is not busy.
1 – Flash data memory is busy.

8.0 Flash Memory

The flash memory consists of the flash program memory and the flash data memory. The flash program memory is further divided into the Boot Area and the Code Area.

A special protection scheme is applied to the lower portion of the flash program memory, called the Boot Area. The Boot Area always starts at address 0 and ranges up to a programmable end address. The maximum boot area address which can be selected is 00 1BFFh. The intended use of this area is to hold In-System-Programming (ISP) routines or essential application routines. The Boot Area is always protected against CPU write access, to avoid unintended modifications.

The Code Area is intended to hold the application code and constant data. The Code Area begins with the next byte after the Boot Area. Table 12 summarizes the properties of the regions of flash memory mapped into the CPU address space.

Table 12 Flash Memory Areas

Area	Address Range	Read Access	Write Access
Boot Area	0–BOOTAREA - 1	Yes	No
Code Area	BOOTAREA–03 FFFFh	Yes	Write access only if section write enable bit is set and global write protection is disabled.
Data Area	0E 0000h–0E 1FFFh	Yes	Write access only if section write enable bit is set and global write protection is disabled.

8.1 FLASH MEMORY PROTECTION

The memory protection mechanisms provide both global and section-level protection. Section-level protection against CPU writes is applied to individual 8K-byte sections of the flash program memory and 512-byte sections of the flash data memory. Section-level protection is controlled through read/write registers mapped into the CPU address space. Global write protection is applied at the device level, to disable flash memory writes by the CPU. Global write protection is controlled by the encoding of bits stored in the flash memory array.

8.1.1 Section-Level Protection

Each bit in the Flash Memory Write Enable (FM0WER and FM1WER) registers enables or disables write access to a corresponding section of flash program memory. Write access to the flash data memory is controlled by the bits in the Flash Slave Memory Write Enable (FSM0WER) register. By default (after reset) all bits in the FM0WER, FM1WER, and FSM0WER registers are cleared, which disables write access by the CPU to all sections. Write access to a section is enabled by setting the corresponding write enable bit. After completing a programming or erase operation, software should clear all write enable bits to protect the flash program memory against any unintended writes.

8.1.2 Global Protection

The WRPROT field in the Protection Word controls global write protection. The Protection Word is located in a special flash memory outside of the CPU address space. If a majority of the bits in the 3-bit WRPROT field are clear, write protection is enabled. Enabling this mode prevents the CPU from writing to flash memory.

The RDPROT field in the Protection Word controls global read protection. If a majority of the bits in the 3-bit RDPROT field are clear, read protection is enabled. Enabling this mode prevents reading by an external debugger through the serial debug interface or by an external flash programmer. CPU read access is not affected by the RDPROT bits.

8.2 FLASH MEMORY ORGANIZATION

Each of the flash memories are divided into main blocks and information blocks. The main blocks hold the code or data used by application software. The information blocks hold factory parameters, protection settings, and other device-specific data. The main blocks are mapped into the CPU address space. The information blocks are accessed indirectly through a register-based interface. Separate sets of registers are provided for accessing flash program memory (FM registers) and flash data memory (FSM registers). The flash program memory consists of two main blocks and two data blocks, as shown in Table 13. The flash data memory consists of one main block and one information block.

Table 13 Flash Memory Blocks

Name	Address Range	Function
Main Block 0	00 0000h–01 FFFFh (CPU address space)	Flash Program Memory
Information Block 0	000h–07Fh (address register)	Function Word, Factory Parameters
Main Block 1	02 0000h–03 FFFFh (CPU address space)	Flash Program Memory
Information Block 1	080h–0FFh (address register)	Protection Word, User Data
Main Block 2	0E 0000h–0E 1FFFh (CPU address space)	Flash Data Memory
Information Block 2	000h–07Fh (address register)	User Data

8.2.1 Main Block 0 and 1

Main Block 0 and Main Block 1 hold the 256K-byte program space, which consists of the Boot Area and Code Area. Each block consists of sixteen 8K-byte sections. Write access by the CPU to Main Block 0 and Main Block 1 is controlled by the corresponding bits in the FM0WER and FM1WER registers, respectively. The least significant bit in each register controls the section at the lowest address.

8.2.2 Information Block 0

Information Block 0 contains 128 bytes, of which one 16-bit word has a dedicated function, called the Function Word. The Function Word resides at address 07Eh. It holds factory parameters.

Software only has read access to Information Block 0 through a register-based interface. The Function Word and the factory parameters are protected against CPU writes. Table 14 shows the structure of Information Block 0.

Table 14 Information Block 0

Name	Address Range	Read Access	Write Access
Function Word	07Eh–07Fh	Yes	No
Other (Used for Factory Parameters)	000h–07Dh		

8.2.3 Information Block 1

Information Block 1 contains 128 bytes, of which one 16-bit word has a dedicated function, called the Protection Word. The Protection Word resides at address 0FEh. It controls the global protection mechanisms and the size of the Boot Area. The Protection Word can be written by the CPU, however the changes only become valid after the next device reset. The remaining Information Block 1 locations can be used to store other user data. Erasing Information Block 1 also erases Main Block 1. Table 15 shows the structure of the Information Block 1.

Table 15 Information Block 1

Name	Address Range	Read Access	Write Access
Protection Word	0FEh–0FFh	Yes	Write access only if section write enable bit is set and global write protection is disabled.
Other (User Data)	080h–0FDh		

8.2.4 Main Block 2

Main Block 2 holds the 8K-byte data area, which consists of sixteen 512-byte sections. Write access by the CPU to Main Block 2 is controlled by the corresponding bits in the FSM0WER register. The least significant bit in the register controls the section at the lowest address.

8.2.5 Information Block 2

Information Block 2 contains 128 bytes, which can be used to store user data. The CPU can always read Information Block 2. The CPU can write Information Block 2 only when global write protection is disabled. Erasing Information Block 2 also erases Main Block 2.

8.3 FLASH MEMORY OPERATIONS

Flash memory programming (erasing and writing) can be performed on the flash data memory while the CPU is executing out of flash program memory. Although the CPU can execute out of flash data memory, it cannot erase or write the flash program memory while executing from flash data memory. To erase or write the flash program memory, the CPU must be executing from the on-chip static RAM or off-chip memory.

An erase operation is required before programming. An erase operation sets all of the bits in the erased region. A programming operation clears selected bits.

The programming mechanism is pipelined, so that a new write request can be loaded while a previous request is in progress. When the FMFULL bit in the FMSTAT or FSMSTAT register is clear, the pipeline is ready to receive a new request. New requests may be loaded after checking only the FMFULL bit.

8.3.1 Main Block Read

Read accesses from flash program memory can only occur when the flash program memory is not busy from a previous write or erase operation. Read accesses from the flash data memory can only occur when both the flash program memory and the flash data memory are not busy. Both byte and word read operations are supported.

8.3.2 Information Block Read

Information block data is read through the register-based interface. Only word read operations are supported and the read address must be word-aligned (LSB = 0). The following steps are used to read from an information block:

1. Load the word address in the Flash Memory Information Block Address (FMIBAR) or Flash Slave Memory Information Block Address (FSMIBAR) register.
2. Read the data word by reading out the Flash Memory Information Block Data (FMIBDR) or Flash Slave Memory Information Block Data (FSMIBDR) register.

8.3.3 Main Block Page Erase

A flash erase operation sets all of the bits in the erased region. Pages of a main block can be individually erased if their write enable bits are set. This method cannot be used to erase the boot area, if defined. Each page in Main Block 0 and 1 consists of 1024 bytes (512 words). Each page in Main Block 2 consists of 512 bytes (256 words). To erase a page, the following steps are performed:

1. Verify that the Flash Memory Busy (FMBUSY) bit is clear. The FMBUSY bit is in the FMSTAT or FSMSTAT register.
2. Prevent accesses to the flash memory while erasing is in progress.

3. Set the Page Erase (PER) bit. The PER bit is in the FMCTRL or FSMCTRL register.
4. Write to an address within the desired page.
5. Wait until the FMBUSY bit becomes clear again.
6. Check the Erase Error (EERR) bit to confirm successful erase of the page. The EERR bit is in the FMSTAT or FSMSTAT register.
7. Repeat steps 4 through 6 to erase additional pages.
8. Clear the PER bit.

8.3.4 Main Block Module Erase

A module erase operation can be used to erase an entire main block. All sections within the block must be enabled for writing. If a boot area is defined in the block, it cannot be erased. The following steps are performed to erase a main block:

1. Verify that the Flash Memory Busy (FMBUSY) bit is clear. The FMBUSY bit is in the FMSTAT or FSMSTAT register.
2. Prevent accesses to the flash memory while erasing is in progress.
3. Set the Module Erase (MER) bit. The MER bit is in the FMCTRL or FSMCTRL register.
4. Write to any address within the desired main block.
5. Wait until the FMBUSY bit becomes clear again.
6. Check the Erase Error (EERR) bit to confirm successful erase of the block. The EERR bit is in the FMSTAT or FSMSTAT register.
7. Clear the MER bit.

8.3.5 Information Block Module Erase

Erasing an information block also erases the corresponding main block. If a boot area is defined in the main block, neither block can be erased. Page erase is not supported for information blocks. The following steps are performed to erase an information block:

1. Verify that the Flash Memory Busy (FMBUSY) bit is clear. The FMBUSY bit is in the FMSTAT or FSMSTAT register.
2. Prevent accesses to the flash memory while erasing is in progress.
3. Set the Module Erase (MER) bit. The MER bit is in the FMCTRL or FSMCTRL register.
4. Load the FMIBAR or FSMIBAR register with any address within the block, then write any data to the FMIBDR or FSMIBDR register.
5. Wait until the FMBUSY bit becomes clear again.
6. Check the Erase Error (EERR) bit to confirm successful erase of the block. The EERR bit is in the FMSTAT or FSMSTAT register.
7. Clear the MER bit.

8.3.6 Main Block Write

Writing is only allowed when global write protection is disabled. Writing by the CPU is only allowed when the write enable bit is set for the sector which contains the word to be written. The CPU cannot write the Boot Area. Only word-wide write access to word-aligned addresses is supported. The following steps are performed to write a word:

1. Verify that the Flash Memory Busy (FMBUSY) bit is clear. The FMBUSY bit is in the FMSTAT or FSMSTAT register.
2. Prevent accesses to the flash memory while the write is in progress.
3. Set the Program Enable (PE) bit. The PE bit is in the FMCTRL or FSMCTRL register.
4. Write a word to the desired word-aligned address. This starts a new pipelined programming sequence. The FMBUSY bit becomes set while the write operation is in progress. The FMFULL bit in the FMSTAT or FSMSTAT register becomes set if a previous write operation is still in progress.
5. Wait until the FMFULL bit becomes clear.
6. Repeat steps 4 and 5 for additional words.
7. Wait until the FMBUSY bit becomes clear again.
8. Check the programming error (PERR) bit to confirm successful programming. The PERR bit is in the FMSTAT or FSMSTAT register.
9. Clear the Program Enable (PE) bit.

8.3.7 Information Block Write

Writing is only allowed when global write protection is disabled. Writing by the CPU is only allowed when the write enable bit is set for the sector which contains the word to be written. The CPU cannot write Information Block 0. Only word-wide write access to word-aligned addresses is supported. The following steps are performed to write a word:

1. Verify that the Flash Memory Busy (FMBUSY) bit is clear. The FMBUSY bit is in the FMSTAT or FSMSTAT register.
2. Prevent accesses to the flash memory while the write is in progress.
3. Set the Program Enable (PE) bit. The PE bit is in the FMCTRL or FSMCTRL register.
4. Write the desired target address into the FMIBAR or FSMIBAR register.
5. Write the data word into the FMIBDR or FSMIBDR register. This starts a new pipelined programming sequence. The FMBUSY bit becomes set while the write operation is in progress. The FMFULL bit in the FMSTAT or FSMSTAT register becomes set if a previous write operation is still in progress.
6. Wait until the FMFULL bit becomes clear.
7. Repeat steps 4 through 6 for additional words.
8. Wait until the FMBUSY bit becomes clear again.
9. Check the programming error (PERR) bit to confirm successful programming. The PERR bit is in the FMSTAT or FSMSTAT register.
10. Clear the Program Enable (PE) bit.

8.4 INFORMATION BLOCK WORDS

Two words in the information blocks are dedicated to hold settings that affect the operation of the system: the Function Word in Information Block 0 and the Protection Word in Information Block 1.

8.4.1 Function Word

The Function Word resides in the Information Block 0 at address 07Eh. At reset, the Function Word is copied into the FMAR0 register.

15	0
Reserved	

8.4.2 Protection Word

The Protection Word resides in Information Block 1 at address 0FEh. At reset, the Protection Word is copied into the FMAR1 register.

15 13	12 10	9 7	6 4	3 1	0
WRPROT	RDPROT	ISPE	EMPTY	BOOTAREA	1

BOOTAREA The BOOTAREA field specifies the size of the Boot Area. The Boot Area starts at address 0 and ends at the address specified by this field. The inverted bits of the BOOTAREA field count the number of 1024-byte blocks to be reserved as the Boot Area. The maximum Boot Area size is 7K bytes (address range 0 to 1BFFh). The end of the Boot Area defines the start of the Code Area. If the device starts in ISP mode and there is no Boot Area defined (encoding 111b), the device is kept in reset. Table 16 lists all possible boot area encodings.

Table 16 Boot Area Encodings

BOOT AREA	Size of the Boot Area	Code Area Start Address
111	No Boot Area defined	00 0000h
110	1024 bytes	00 0400h
101	2048 bytes	00 0800h
100	3072 bytes	00 0C00h
011	4096 bytes	00 1000h
010	5120 bytes	00 1400h
001	6144 bytes	00 1800h
000	7168 bytes	00 1C00h

EMPTY The EMPTY field indicates whether the flash program memory has been programmed or should be treated as blank. If a majority of the three EMPTY bits are clear, the flash program memory is treated as programmed. If a majority of the EMPTY bits are set, the flash program memory is treated as empty. If the ENV[1:0] inputs (see Section 6.1) are sampled high at reset and the EMPTY bits indicate the flash program memory is empty, the device will begin execution in ISP mode. The device enters ISP mode without regard to the EMPTY status if ENV0 is driven low and ENV1 is driven high.

ISPE The ISPE field indicates whether the Boot Area is used to hold In-System-Programming routines or user application routines. If a majority of the three ISPE bits are set, the Boot Area holds ISP routines. If majority of the ISPE bits are clear, the Boot Area holds user application routines. Table 17 summarizes all possible EMPTY, ISPE, and Boot Area settings and the corresponding start-up operation for each combination. In DEV mode, the EMPTY bit settings are ignored and the CPU always starts executing from address 0.

Table 17 CPU Reset Behavior

EMPTY	ISPE	Boot Area	Start-Up Operation
Not Empty	ISP	Defined	Device starts in IRE/ ERE mode from Code Area start address
Not Empty	ISP	Not Defined	Device starts in IRE/ ERE mode from Code Area start address
Not Empty	No ISP	Don't Care	Device starts in IRE/ ERE mode from address 0
Empty	ISP	Defined	Device starts in ISP mode from Code Area start address
Empty	ISP	Not Defined	Device starts in ISP mode and is kept in its reset state
Empty	No ISP	Don't Care	

RDPROT The RDPROT field controls the global read protection mechanism for the on-chip flash program memory. If a majority of the three RDPROT bits are clear, the flash program memory is protected against read access from the serial debug interface or an external flash programmer. CPU read access is not affected by the RDPROT bits. If a majority of the RDPROT bits are set, read access is allowed.

WRPROT The WRPROT field controls the global write protection mechanism for the on-chip flash program memory. If a majority of the three WRPROT bits are clear, the flash program memory is protected against write access from any source and read access from the serial debug interface. If a majority of the WRPROT bits are set, write access is allowed.

8.5 FLASH MEMORY INTERFACE REGISTERS

There is a separate interface for the program flash and data flash memories. The same set of registers exist in both interfaces. In most cases they are independent of each other, but in some cases the program flash interface controls the interface for both memories, as indicated in the following sections. Table 18 lists the registers.

Table 18 Flash Memory Interface Registers

Program Memory	Data Memory	Description
FMIBAR FF F940h	FSMIBAR FF F740h	Flash Memory Information Block Address Register
FMIBDR FF F942h	FSMIBDR FF F742h	Flash Memory Information Block Address Register
FM0WER FF F944h	FSM0WER FF F744h	Flash Memory 0 Write Enable Register
FM1WER FF F946h	N/A	Flash Memory 1 Write Enable Register
FMCTRL FF F94Ch	FSMCTRL FF F74Ch	Flash Memory Control Register
FMSTAT FF F94Eh	FSMSTAT FF F74Eh	Flash Memory Status Register
FMPSR FF F950h	FSMPSR FF F750h	Flash Memory Prescaler Register
FMSTART FF F952h	FSMSTART FF F752h	Flash Memory Start Time Reload Register
FMTRAN FF F954h	FSMTRAN FF F754h	Flash Memory Transition Time Reload Register
FMPROG FF F956h	FSMPROG FF F756h	Flash Memory Programming Time Reload Register
FMPERASE FF F958h	FSMPERASE FF F758h	Flash Memory Page Erase Time Reload Register
FMMERASE0 FF F95Ah	FSMMERASE0 FF F75Ah	Flash Memory Module Erase Time Reload Register 0
FMEND FF F95Eh	FSMEND FF F75Eh	Flash Memory End Time Reload Register
FMMEND FF F960h	FSMMEND FF F760h	Flash Memory Module Erase End Time Reload Register
FMRCV FF F962h	FSMRCV FF F762h	Flash Memory Recovery Time Reload Register
FMAR0 FF F964h	FSMAR0 FF F764h	Flash Memory Auto-Read Register 0
FMAR1 FF F966h	FSMAR1 FF F766h	Flash Memory Auto-Read Register 1
FMAR2 FF F968h	FSMAR2 FF F768h	Flash Memory Auto-Read Register 2

8.5.1 Flash Memory Information Block Address Register (FMIBAR/FSMIBAR)

The FMIBAR register specifies the 8-bit address for read or write access to an information block. Because only word access to the information blocks is supported, the least significant bit (LSB) of the FMIBAR must be 0 (word-aligned). The hardware automatically clears the LSB, without regard to the value written to the bit. The FMIBAR register is cleared after device reset. The CPU bus master has read/write access to this register.

15 … 8	7 … 0
Reserved	IBA

IBA The Information Block Address field holds the word-aligned address of an information block location accessed during a read or write transaction. The LSB of the IBA field is always clear.

8.5.2 Flash Memory Information Block Data Register (FMIBDR/FSMIBDR)

The FMIBDR register holds the 16-bit data for read or write access to an information block. The FMIBDR register is cleared after device reset. The CPU bus master has read/write access to this register.

15 … 0
IBD

IBD The Information Block Data field holds the data word for access to an information block. For write operations the IBD field holds the data word to be programmed into the information block location specified by the IBA ad-

dress. During a read operation from an information block, the IBD field receives the data word read from the location specified by the IBA address.

8.5.3 Flash Memory 0 Write Enable Register (FM0WER/FSM0WER)

The FM0WER register controls section-level write protection for the first half of the flash program memory. The FMS0WER registers controls section-level write protection for the flash data memory. Each data block is divided into 16 8K-byte sections. Each bit in the FM0WER and FSM0WER registers controls write protection for one of these sections. The FM0WER and FSM0WER registers are cleared after device reset, so the flash memory is write protected after reset. The CPU bus master has read/write access to this registers.

15	0
FM0WE	

FM0WEn The Flash Memory 0 Write Enable n bits control write protection for a section of a flash memory data block. The address mapping of the register bits is shown below.

Bit	Logical Address Range
0	00 0000h–00 1FFFh
1–14	. . .
15	01 E000h–01 FFFFh

8.5.4 Flash Memory 1 Write Enable Register (FM1WER)

The FM1WER register controls write protection for the second half of the program flash memory. The data block is divided into 16 8K-byte sections. Each bit in the FM1WER register controls write protection for one of these sections. The FM1WER register is cleared after device reset, so the flash memory is write protected after reset. The CPU bus master has read/write access to this registers.

15	0
FM1WE	

FM1WEn The Flash Memory 1 Write Enable n bits control write protection for a section of a flash memory data block. The address mapping of the register bits is shown below.

Bit	Logical Address Range
0	02 0000h–02 1FFFh
1–14	. . .
15	03 E000h–03 FFFFh

8.5.5 Flash Data Memory 0 Write Enable Register (FSM0WER)

The FSM0WER register controls write protection for the flash data memory. The data block is divided into 16 512-byte sections. Each bit in the FSM0WER register controls write protection for one of these sections. The FSM0WER register is cleared after device reset, so the flash memory is write protected after reset. The CPU bus master has read/write access to this registers.

15	0
FSM0WE	

FSM0WEn The Flash Data Memory 0 Write Enable n bits control write protection for a section of a flash memory data block. The address mapping of the register bits is shown below.

Bit	Logical Address Range
0	0E 0000h–0E 01FFh
1–14	. . .
15	0E 1E00h–0E 1FFFh

8.5.6 Flash Memory Control Register (FMCTRL/FSMCTRL)

This register controls the basic functions of the Flash program memory. The register is clear after device reset. The CPU bus master has read/write access to this register.

7	6	5	4	3	2	1	0
MER	PER	PE	IENPROG	DISVRF	Res.	CWD	LOWPRW

LOWPRW The Low Power Mode controls whether flash program memory is operated in low-power mode, which draws less current when data is read. This is accomplished be only accessing the flash program memory during the first half of the clock period. The low-power mode must not be used at System Clock frequencies above 25 MHz, otherwise a read access may return undefined data. This bit must not be changed while the flash program memory is busy being programmed or erased.
0 – Normal mode.
1 – Low-power mode.

CWD The CPU Write Disable bit controls whether the CPU has write access to flash memory. This bit must not be changed while FMBUSY is set.
0 – The CPU has write access to the flash memory
1 – An external debugging tool is the current “owner” of the flash memory interface, so write accesses by the CPU are inhibited.

DISVRF — The Disable Verify bit controls the automatic verification feature. This bit must not be changed while the flash program memory is busy being programmed or erased.
- 0 – New flash program memory contents are automatically verified after programming.
- 1 – Automatic verification is disabled.

IENPROG — The Interrupt Enable for Program bit is clear after reset. The flash program and data memories share a single interrupt channel but have independent interrupt enable control bits.
- 0 – No interrupt request is asserted to the ICU when the FMFULL bit is cleared.
- 1 – An interrupt request is made when the FMFULL bit is cleared and new data can be written into the write buffer.

PE — The Program Enable bit controls write access of the CPU to the flash program memory. This bit must not be altered while the flash program memory is busy being programmed or erased. The PER and MER bits must be clear when this bit is set.
- 0 – Programming the flash program memory by the CPU is disabled.
- 1 – Programming the flash program memory is enabled.

PER — The Page Erase Enable bit controls whether a a valid write operation triggers an erase operation on a 1024-byte page of flash memory. Page erase operations are only supported for the main blocks, not the information blocks. A page erase operation on an information block is ignored and does not alter the information block. When the PER bit is set, the PE and MER bits must be clear. This bit must not be changed while the flash program memory is busy being programmed or erased.
- 0 – Page erase mode disabled. Write operations are performed normally.
- 1 – A valid write operation to a word location in program memory erases the page that contains the word.

MER — The Module Erase Enable bit controls whether a valid write operation triggers an erase operation on an entire block of flash memory. If an information block is written in this mode, both the information block and its corresponding main block are erased. When the MER bit is set, the PE and PER bits must be clear. This bit must not be changed while the flash program memory is busy being programmed or erased.
- 0 – Module erase mode disabled. Write operations are performed normally.
- 1 – A valid write operation to a word location in a main block erases the block that contains the word. A valid write operation to a word location in an information block erases the block that contains the word and its associated main block.

8.5.7 Flash Memory Status Register (FMSTAT/FSMSTAT)

This register reports the currents status of the on-chip Flash memory. The FLSR register is clear after device reset. The CPU bus master has read/write access to this register.

7 5	4	3	2	1	0
Reserved	DERR	FMFULL	FMBUSY	PERR	EERR

EERR — The Erase Error bit indicates whether an error has occurred during a page erase or module (block) erase. After an erase error occurs, software can clear the EERR bit by writing a 1 to it. Writing a 0 to the EERR bit has no effect. Software must not change this bit while the flash program memory is busy being programmed or erased.
- 0 – The erase operation was successful.
- 1 – An erase error occurred.

PERR — The Program Error bit indicates whether an error has occurred during programming. After a programming error occurs, software can clear the PERR bit by writing a 1 to it. Writing a 0 to the PERR bit has no effect. Software must not change this bit while the flash program memory is busy being programmed or erased.
- 0 – The programming operation was successful.
- 1 – A programming error occurred.

FMBUSY — The Flash Memory Busy bit indicates whether the flash memory (either main block or information block) is busy being programmed or erased. During that time, software must not request any further flash memory operations. If such an attempt is made, the CPU is stopped as long as the FMBUSY bit is active. The CPU must not attempt to read from program memory (including instruction fetches) while it is busy.
- 0 – Flash memory is ready to receive a new erase or programming request.
- 1 – Flash memory busy with previous erase or programming operation.

FMFULL — The Flash Memory Buffer Full bit indicates whether the write buffer for programming is full or not. When the buffer is full, new erase and write requests may not be made. The IENPROG bit can be enabled to trigger an interrupt when the buffer is ready to receive a new request.
- 0 – Buffer is ready to receive new erase or write requests.
- 1 – Buffer is full. No new erase or write requests can be accepted.

DERR — The Data Loss Error bit indicates that a buffer overrun has occurred during a programming sequence. After a data loss error occurs, software can clear the DERR bit by writing a 1 to it. Writing a 0 to the DERR bit has no effect. Software must not change this bit while the flash program memory is busy being programmed or erased.
0 – No data loss error occurred.
1 – Data loss error occurred.

8.5.8 Flash Memory Prescaler Register (FMPSR/FSMPSR)

The FMPSR register is a byte-wide read/write register that selects the prescaler divider ratio. The CPU must not modify this register while an erase or programming operation is in progress (FMBUSY is set). At reset, this register is initialized to 04h if the flash memory is idle. The CPU bus master has read/write access to this register.

7 – 5	4 – 0
Reserved	FTDIV

FTDIV — The prescaler divisor scales the frequency of the System Clock by a factor of (FTDIV + 1).

8.5.9 Flash Memory Start Time Reload Register (FMSTART/FSMSTART)

The FMSTART/FSMSTART register is a byte-wide read/write register that controls the program/erase start delay time. Software must not modify this register while a program/erase operation is in progress (FMBUSY set). At reset, this register is initialized to 18h if the flash memory is idle. The CPU bus master has read/write access to this register.

7 – 0
FTSTART

FTSTART — The Flash Timing Start Delay Count field generates a delay of (FTSTART + 1) prescaler output clocks.

8.5.10 Flash Memory Transition Time Reload Register (FMTRAN/FSMTRAN)

The FMTRAN/FMSTRAN register is a byte-wide read/write register that controls some program/erase transition times. Software must not modify this register while program/erase operation is in progress (FMBUSY set). At reset, this register is initialized to 30h if the flash memory is idle. The CPU bus master has read/write access to this register.

7 – 0
FTTRAN

FTTRAN — The Flash TIming Transition Count field specifies a delay of (FTTRAN + 1) prescaler output clocks.

8.5.11 Flash Memory Programming Time Reload Register (FMPROG/FSMPROG)

The FMPROG/FSMPROG register is a byte-wide read/write register that controls the programming pulse width. Software must not modify this register while a program/erase operation is in progress (FMBUSY set). At reset, this register is initialized to 16h if the flash memory is idle. The CPU bus master has read/write access to this register.

7 – 0
FTPROG

FTPROG — The Flash Timing Programming Pulse Width field specifies a programming pulse width of 8 × (FTPROG + 1) prescaler output clocks.

8.5.12 Flash Memory Page Erase Time Reload Register (FMPERASE/FSMPERASE)

The FMPERASE/FSMPERASE register is a byte-wide read/write register that controls the page erase pulse width. Software must not modify this register while a program/erase operation is in progress (FMBUSY set). At reset, this register is initialized to 04h if the flash memory is idle. The CPU bus master has read/write access to this register.

7 – 0
FTPER

FTPER — The Flash Timing Page Erase Pulse Width field specifies a page erase pulse width of 4096 × (FTPER + 1) prescaler output clocks.

8.5.13 Flash Memory Module Erase Time Reload Register 0 (FMMERASE0/FSMMERASE0)

The FMMERASE0/FSMMERASE0 register is a byte-wide read/write register that controls the module erase pulse width. Software must not modify this register while a program/erase operation is in progress (FMBUSY set). At reset, this register is initialized to EAh if the flash memory is idle. The CPU bus master has read/write access to this register.

7	0
FTMER	

FTMER The Flash Timing Module Erase Pulse Width field specifies a module erase pulse width of 4096 × (FTMER + 1) prescaler output clocks.

8.5.14 Flash Memory End Time Reload Register (FMEND/FSMEND)

The FMEND/FSMEND register is a byte-wide read/write register that controls the delay time after a program/erase operation. Software must not modify this register while a program/erase operation is in progress (FMBUSY set). At reset, this register is initialized to 18h when the flash memory on the chip is idle. The CPU bus master has read/write access to this register.

7	0
FTEND	

FTEND The Flash Timing End Delay Count field specifies a delay of (FTEND + 1) prescaler output clocks.

8.5.15 Flash Memory Module Erase End Time Reload Register (FMMEND/FSMMEND)

The FMMEND/FSMMEND register is a byte-wide read/write register that controls the delay time after a module erase operation. Software must not modify this register while a program/erase operation is in progress (FMBUSY set). At reset, this register is initialized to 3Ch if the flash memory is idle. The CPU bus master has read/write access to this register.

7	0
FTMEND	

FTMEND The Flash Timing Module Erase End Delay Count field specifies a delay of 8 × (FTMEND + 1) prescaler output clocks.

8.5.16 Flash Memory Recovery Time Reload Register (FMRCV/FSMRCV)

The FMRCV/FSMRCV register is a byte-wide read/write register that controls the recovery delay time between two flash memory accesses. Software must not modify this register while a program/erase operation is in progress (FMBUSY set). At reset, this register is initialized to 04h if the flash memory is idle. The CPU bus master has read/write access to this register.

7	0
FTRCV	

FTRCV The Flash Timing Recovery Delay Count field specifies a delay of (FTRCV + 1) prescaler output clocks.

8.5.17 Flash Memory Auto-Read Register 0 (FMAR0/FSMAR0)

The FMAR0/FSMAR0 register contains a copy of the Function Word from Information Block 0

15	0
Reserved	

8.5.18 Flash Memory Auto-Read Register 1 (FMAR1/FSMAR1)

The FMAR1 register contains a copy of the Protection Word from Information Block 1. The Protection Word is sampled at reset. The contents of the FMAR1 register define the current Flash memory protection settings. The CPU bus master has read-only access to this register. The FSMAR1 register has the same value as the FMAR1 register. The format is the same as the format of the Protection Word (see Section 8.4.2).

15 13	12 10	9 7	6 4	3 1	0
WRPROT	RDPROT	ISPE	EMPTY	BOOTAREA	1

8.5.19 Flash Memory Auto-Read Register 2 (FMAR2/ FSMAR2)

The FMAR2 register is a word-wide read-only register, which is loaded during reset. It is used to build the Code Area start address. At reset, the CPU executes a branch, using the contents of the FMAR2 register as displacement. The CPU bus master has read-only access to this register.

The FSMAR2 register has the same value as the FMAR2 register.

7	0
CADR7:0	

15	13	12	9	8
CADR15:13		CADR12:8		CADR8

CADR8:0 The Code Area Start Address (bits 8:0) contains the lower 9 bits of the Code Area start address. The CADR8:0 field has a fixed value of 0.

CADR12:9 The Code Area Start Address (bits 12:9) are loaded during reset with the inverted value of BOOTAREA3:0.

CADR15:13 The Code Area Start Address (bits 15:13) contains the upper 3 bits of the Code Area start address. The CADR15:13 field has a fixed value of 0.

9.0 DMA Controller

The DMA Controller (DMAC) has a register-based programming interface, as opposed to an interface based on I/O control blocks. After loading the registers with source and destination addresses, as well as block size and type of operation, a DMAC channel is ready to respond to DMA transfer requests. A request can only come from on-chip peripherals or software, not external peripherals. On receiving a DMA transfer request, if the channel is enabled, the DMAC performs the following operations:

1. Arbitrates to become master of the CPU bus.
2. Determines priority among the DMAC channels, one clock cycle before T1 of the DMAC transfer cycle. (T1 is the first clock cycle of the bus cycle.) Priority among the DMAC channels is fixed in descending order, with Channel 0 having the highest priority.
3. Executes data transfer bus cycle(s) selected by the values held in the control registers of the channel being serviced, and according to the accessed memory address. The DMAC acknowledges the request during the bus cycle that accesses the requesting device.
4. If the transfer of a block is terminated, the DMAC does the following:
   Updates the termination bits.
   Generates an interrupt (if enabled).
   Goes to step 6.
5. If $\overline{\text{DMRQ}}$n is still active, and the Bus Policy is “continuous”, returns to step 3.
6. Returns mastership of the CPU bus to the CPU.

Each DMAC channel can be programmed for direct (flyby) or indirect (memory-to-memory) data transfers. Once a DMAC transfer cycle is in progress, the next transfer request is sampled when the DMAC acknowledge is de-asserted, then on the rising edge of every clock cycle.

The configuration of either address freeze or address update (increment or decrement) is independent of the number of transferred bytes, transfer direction, or number of bytes in each DMAC transfer cycle. All these can be configured for each channel by programming the appropriate control registers.

Each DMAC channel has eight control registers. DMAC channels are described hereafter with the suffix n, where n = 0 to 3, representing the channel number in the registernames.

9.1 CHANNEL ASSIGNMENT

Table 19 shows the assignment of the DMA channels to different tasks. Four channels can be shared by a primary and an secondary function. However, only one source at a time can be enabled. If a channel is used for memory block transfers, other resources must be disabled.

Table 19 DMA Channel Assignment

Channel	Peripheral	Trans-action	Register
0 (Primary)	Reserved	R/W	RX/TX FIFO
0 (Secondary)	UART	R	RXBUF
1 (Primary)	UART	W	TXBUF
1 (Secondary)	unused	N/A	N/A
2 (Primary)	Audio Interface	R	ARDR0
2 (Secondary)	CVSD/PCM Transcoder	R	PCMOUT
3 (Primary)	Audio Interface	W	ATDR0
3 (Secondary)	CVSD/PCM Transcoder	W	PCMIN

9.2 TRANSFER TYPES

The DMAC uses two data transfer modes, Direct (Flyby) and Indirect (Memory-to-Memory). The choice of mode depends on the required bus performance and whether direct mode is available for the transfer. Indirect mode must be used when the source and destination have differing bus widths, when both the source and destination are in memory, and when the destination does not support direct mode.

9.2.1 Direct (Flyby) Transfers

In direct mode each data item is transferred using a single bus cycle, without reading the data into the DMAC. It provides the fastest transfer rate, but it requires identical source and destination bus widths. The DMAC cannot use Direct cycles between two memory devices. One of the devices must be an I/O device that supports the Direct (Flyby) mechanism, as shown in Figure 2.

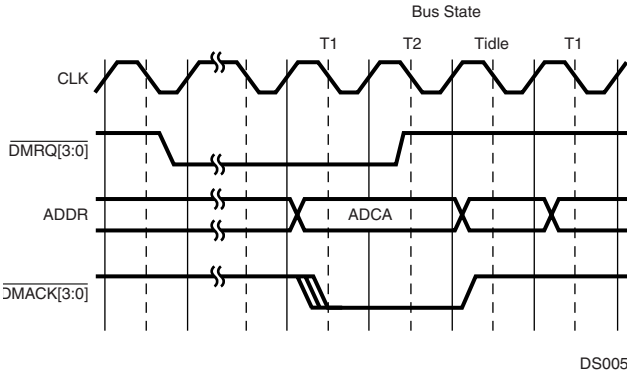

Figure 2. Direct DMA Cycle Followed by a CPU Cycle

Direct mode supports two bus policies: intermittent and continuous. In intermittent mode, the DMAC gives bus mastership back to the CPU after every cycle. In continuous mode, the DMAC remains bus master until the transfer is complet-

ed. The maximum bus throughput in intermittent mode is one transfer for every three System Clock cycles. The maximum bus throughput in continuous mode is one transfer for every clock cycle.

The I/O device which made the DMA request is called the implied I/O device. The other device can be either memory or another I/O device, and is called the addressed device.

Because only one address is required in direct mode, this address is taken from the corresponding ADCAn counter. The DMAC channel generates either a read or a write bus cycle, as controlled by the DMACNTLn.DIR bit.

When the DMACNTLn.DIR bit is clear, a read bus cycle from the addressed device is performed, and the data is written to the implied I/O device. When the DMACNTLn.DIR bit is set, a write bus cycle to the addressed device is performed, and the data is read from the implied I/O device.

The configuration of either address freeze or address update (increment or decrement) is independent of the number of transferred bytes, transfer direction, or number of bytes in each DMAC transfer cycle. All these can be configured for each channel by programming the appropriate control register.

Whether 8 or 16 bits are transferred in each cycle is selected by the DMACNTLn.TCS register bit. After the data item has been transferred, the BLTCn counter is decremented by one. The ADCAn counter is updated according to the INCA and ADA fields in the DMACNTLn register.

9.2.2 Indirect (Memory-To-Memory) Transfers

In indirect (memory-to-memory) mode, data transfers use two consecutive bus cycles. The data is first read into a temporary register, and then written to the destination in the following cycle. This mode is slower than the direct (flyby) mode, but it provides support for different source and destination bus widths. Indirect mode must be used for transfers between memory devices.

If an intermittent bus policy is used, the maximum throughput is one transfer for every five clock cycles. If a continuous bus policy is used, maximum throughput is one transfer for every two clock cycles.

When the DMACNTLn.DIR bit is 0, the first bus cycle reads data from the source using the ADCAn counter, while the second bus cycle writes the data into the destination using the ADCBn counter. When the DMACNTLn.DIR bit is set, the first bus cycle reads data from the source using the ADCBn counter, while the second bus cycle writes the data into the destination addressed by the ADCAn counter.

The number of bytes transferred in each cycle is taken from the DMACNTLn.TCS register bit. After the data item has been transferred, the BLTCn counter is decremented by one. The ADCAn and ADCBn counters are updated according to the INCA, INCB, ADA, and ADB fields in the DMACNTLn register.

9.3 OPERATION MODES

The DMAC operates in three different block transfer modes: single transfer, double buffer, and auto-initialize.

9.3.1 Single Transfer Operation

This mode provides the simplest way to accomplish a single block data transfer.

Initialization

1. Write the block transfer addresses and byte count into the corresponding ADCAn, ADCBn, and BLTCn counters.
2. Clear the DMACNTLn.OT bit to select non-auto-initialize mode. Clear the DMASTAT.VLD bit by writing a 1 to it.
3. Set the DMACNTLn.CHEN bit to activate the channel and enable it to respond to DMA transfer requests.

Termination

When the BLTCn counter reaches 0:

1. The transfer operation terminates.
2. The DMASTAT.TC and DMASTAT.OVR bits are set, and the DMASTAT.CHAC bit is cleared.
3. An interrupt is generated if enabled by the DMACNTLn.ETC or DMACNTLn.EOVR bits.

The DMACNTLn.CHEN bit must be cleared before loading the DMACNTLn register to avoid prematurely starting a new DMA transfer.

9.3.2 Double Buffer Operation

This mode allows software to set up the next block transfer while the current block transfer proceeds.

Initialization

1. Write the block transfer addresses and byte count into the ADCAn, ADCBn, and BLTCn counters.
2. Clear the DMACNTLn.OT bit to select non-auto-initialize mode. Clear the DMASTAT.VLD bit by writing a 1 to it.
3. Set the DMACNTLn.CHEN bit. This activates the channel and enables it to respond to DMA transfer requests.
4. While the current block transfer proceeds, write the addresses and byte count for the next block into the ADRAn, ADRBn, and BLTRn registers. The BLTRn register must be written last, because it sets the DMASTAT.VLD bit which indicates that all the parameters for the next transfer have been updated.

Continuation/Termination

When the BLTCn counter reaches 0:

1. The DMASTAT.TC bit is set.
2. An interrupt is generated if enabled by the DMACNTLn.ETC bit.
3. The DMAC channel checks the value of the VLD bit.

If the DMASTAT.VLD bit is set:

1. The channel copies the ADRAn, ADRBn, and BLTRn values into the ADCAn, ADCBn, and BLTCn registers.
2. The DMASTAT.VLD bit is cleared.
3. The next block transfer is started.

If the DMASTAT.VLD bit is clear:

1. The transfer operation terminates.
2. The channel sets the DMASTAT.OVR bit.
3. The DMASTAT.CHAC bit is cleared.
4. An interrupt is generated if enabled by the DMACNTLn.EOVR bit.

The DMACNTLn.CHEN bit must be cleared before loading the DMACNTLn register to avoid prematurely starting a new DMA transfer.

Note: The ADCBn and ADRBn registers are used only in indirect (memory-to-memory) transfer. In direct (flyby) mode, the DMAC does not use them and therefore does not copy ADRBn into ADCBn.

9.3.3 Auto-Initialize Operation

This mode allows the DMAC to continuously fill the same memory area without software intervention.

Initialization

1. Write the block addresses and byte count into the ADCAn, ADCBn, and BLTCn counters, as well as the ADRAn, ADRBn, and BLTRn registers.
2. Set the DMACNTLn.OT bit to select auto-initialize mode.
3. Set the DMACNTLn.CHEN bit to activate the channel and enable it to respond to DMA transfer requests.

Continuation

When the BLTCn counter reaches 0:

1. The contents of the ADRAn, ADRBn, and BLTRn registers are copied to the ADCAn, ADCBn, and BLTCn counters.
2. The DMAC channel checks the value of the DMASTAT.TC bit.

If the DMASTAT.TC bit is set:

1. The DMASTAT.OVR bit is set.
2. A level interrupt is generated if enabled by the DMACNTLn.EOVR bit.
3. The operation is repeated.

If the DMASTAT.TC bit is clear:

1. The DMASTAT.TC bit is set.
2. A level interrupt is generated if enabled by the DMACNTLn.ETC bit.
3. The DMAC operation is repeated.

Termination

The DMA transfer is terminated when the DMACNTLn.CHEN bit is cleared.

9.4 SOFTWARE DMA REQUEST

In addition to the hardware requests from I/O devices, a DMA transfer request can also be initiated by software. A software DMA transfer request must be used for block copying between memory devices.

When the DMACNTLn.SWRQ bit is set, the corresponding DMA channel receives a DMA transfer request. When the DMACNTLn.SWRQ bit is clear, the software DMA transfer request of the corresponding channel is inactive.

For each channel, use the software DMA transfer request only when the corresponding hardware DMA request is inactive and no terminal count interrupt is pending. Software can poll the DMASTAT.CHAC bit to determine whether the DMA channel is already active. After verifying the DMASTATn.CHAC bit is clear (channel inactive), check the DMASTATn.TC (terminal count) bit. If the TC bit is clear, then no terminal count condition exists and therefore no terminal count interrupt is pending. If the channel is not active and no terminal count interrupt is pending, software may request a DMA transfer.

9.5 DEBUG MODE

When the FREEZE signal is active, all DMA operations are stopped. They will start again when the FREEZE signal goes inactive. This allows breakpoints to be used in debug systems.

9.6 DMA CONTROLLER REGISTER SET

There are four identical sets of DMA controller registers, as listed in Table 20.

Table 20 DMA Controller Registers

Name	Address	Description
ADCA0	FF F800h	Device A Address Counter Register
ADRA0	FF F804h	Device A Address Register
ADCB0	FF F808h	Device B Address Counter Register
ADRB0	FF F80Ch	Device B Address Register
BLTC0	FF F810h	Block Length Counter Register
BLTR0	FF F814h	Block Length Register
DMACNTL0	FF F81Ch	DMA Control Register
DMASTAT0	FF F81Eh	DMA Status Register
ADCA1	FF F820h	Device A Address Counter Register
ADRA1	FF F824h	Device A Address Register
ADCB1	FF F828h	Device B Address Counter Register
ADRB1	FF F82Ch	Device B Address Register
BLTC1	FF F830h	Block Length Counter Register
BLTR1	FF F834h	Block Length Register
DMACNTL1	FF F83Ch	DMA Control Register
DMASTAT1	FF F83Eh	DMA Status Register

Table 20 DMA Controller Registers

Name	Address	Description
ADCA2	FF F840h	Device A Address Counter Register
ADRA2	FF F844h	Device A Address Register
ADCB2	FF F848h	Device B Address Counter Register
ADRB2	FF F84Ch	Device B Address Register
BLTC2	FF F850h	Block Length Counter Register
BLTR2	FF F854h	Block Length Register
DMACNTL2	FF F85Ch	DMA Control Register
DMASTAT2	FF F85Eh	DMA Status Register
ADCA3	FF F860h	Device A Address Counter Register
ADRA3	FF F864h	Device A Address Register
ADCB3	FF F868h	Device B Address Counter Register
ADRB3	FF F86Ch	Device B Address Register
BLTC3	FF F870h	Block Length Counter Register
BLTR3	FF F874h	Block Length Register
DMACNTL3	FF F87Ch	DMA Control Register
DMASTAT3	FF F87Eh	DMA Status Register

9.6.1 Device A Address Counter Register (ADCAn)

The Device A Address Counter register is a 32-bit, read/write register. It holds the current 24-bit address of either the source data item or the destination location, depending on the state of the DIR bit in the CNTLn register. The ADA bit of DMACNTLn register controls whether to adjust the pointer in the ADCAn register by the step size specified in the INCA field of DMACNTLn register. The upper 8 bits of the ADCAn register are reserved and always clear.

31 24	23 0
Reserved	Device A Address Counter

9.6.2 Device A Address Register (ADRAn)

The Device A Address register is a 32-bit, read/write register. It holds the 24-bit starting address of either the next source data block, or the next destination data area, according to the DIR bit in the DMACNTLn register. The upper 8 bits of the ADRAn register are reserved and always clear.

31 24	23 0
Reserved	Device A Address

9.6.3 Device B Address Counter Register (ADCBn)

The Device B Address Counter register is a 32-bit, read/write register. It holds the current 24-bit address of either the source data item, or the destination location, according to the DIR bit in the CNTLn register. The ADCBn register is updated after each transfer cycle by INCB field of the DMACNTLn register according to ADB bit of the DMACNTLn register. In direct (flyby) mode, this register is not used. The upper 8 bits of the ADCBn register are reserved and always clear.

31 24	23 0
Reserved	Device B Address Counter

9.6.4 Device B Address Register (ADRBn)

The Device B Address register is a 32-bit, read/write register. It holds the 24-bit starting address of either the next source data block or the next destination data area, according to the DIR bit in the CNTLn register. In direct (flyby) mode, this register is not used. The upper 8 bits of the ADCRBn register are reserved and always clear.

31 24	23 0
Reserved	Device B Address

9.6.5 Block Length Counter Register (BLTCn)

The Block Length Counter register is a 16-bit, read/write register. It holds the current number of DMA transfers to be executed in the current block. BLTCn is decremented by one after each transfer cycle. A DMA transfer may consist of 1 or 2 bytes, as selected by the DMACNTLn.TCS bit.

15 0
Block Length Counter

Note: 0000h is interpreted as 2^{16}-1 transfer cycles.

9.6.6 Block Length Register (BLTRn)

The Block Length register is a 16-bit, read/write register. It holds the number of DMA transfers to be performed for the next block. Writing this register automatically sets the DMASTAT.VLD bit.

15	0
Block Length	

Note: 0000h is interpreted as 2^{16}-1 transfer cycles.

9.6.7 DMA Control Register (DMACNTLn)

The DMA Control register n is a word-wide, read/write register that controls the operation of DMA channel n. This register is cleared at reset. Reserved bits must be written with 0.

7	6	5	4	3	2	1	0
BPC	OT	DIR	IND	TCS	EOVR	ETC	CHEN

15	14	13	12	11	10	9	8
Res.	INCB		ADB	INCA		ADA	SWRQ

CHEN — The Channel Enable bit must be set to enable any DMA operation on this channel. Writing a 1 to this bit starts a new DMA transfer even if it is currently a 1. If all DMACNTLn.CHEN bits are clear, the DMA clock is disabled to reduce power.
0 – Channel disabled.
1 – Channel enabled.

ETC — If the Enable Interrupt on Terminal Count bit is set, it enables an interrupt when the DMASTAT.TC bit is set.
0 – Interrupt disabled.
1 – Interrupt enabled.

EOVR — If the Enable Interrupt on OVR bit is set, it enables an interrupt when the DMASTAT.OVR bit is set.
0 – Interrupt disabled.
1 – Interrupt enabled.

TCS — The Transfer Cycle Size bit specifies the number of bytes transferred in each DMA transfer cycle. In direct (fly-by) mode, undefined results occur if the TCS bit is not equal to the addressed memory bus width.
0 – Byte transfers (8 bits per cycle).
1 – Word transfers (16 bits per cycle).

IND — The Direct/Indirect Transfer bit specifies the transfer type.
0 – Direct transfer (flyby).
1 – Indirect transfer (memory-to-memory).

DIR — The Transfer Direction bit specifies the direction of the transfer relative to Device A.
0 – Device A (pointed to by the ADCAn register) is the source. In Fly-By mode a read transaction is initialized.
1 – Device A (pointed to by the ADCAn register) is the destination. In Fly-By mode a write transaction is initialized.

OT — The Operation Type bit specifies the operation mode of the DMA controller.
0 – Single-buffer mode or double-buffer mode enabled.
1 – Auto-Initialize mode enabled.

BPC — The Bus Policy Control bit specifies the bus policy applied by the DMA controller. The operation mode can be either intermittent (cycle stealing) or continuous (burst).
0 – Intermittent operation. The DMAC channel relinquishes the bus after each transaction, even if the request is still asserted.
1 – Continuous operation. The DMAC channel n uses the bus continuously as long as the request is asserted. This mode can only be used for software DMA requests. For hardware DMA requests, the BPC bit must be clear.

SWRQ — The Software DMA Request bit is written with a 1 to initiate a software DMA request. Writing a 0 to this bit deactivates the software DMA request. The SWRQ bit must only be written when the DMRQ signal for this channel is inactive (DMASTAT.CHAC = 0).
0 – Software DMA request is inactive.
1 – Software DMA request is active.

ADA — If the Device A Address Control bit is set, it enables updating the Device A address.
0 – ADCAn address unchanged.
1 – ADCAn address incremented or decremented, according to INCA field of DMACNTLn register.

INCA — The Increment/Decrement ADCAn field specifies the step size for the Device A address increment/decrement.
00 – Increment ADCAn register by 1.
01 – Increment ADCAn register by 2.
10 – Decrement ADCAn register by 1.
11 – Decrement ADCAn register by 2.

ADB — If the Device B Address Control bit is set, it enables updating the Device B Address.
0 – ADCBn address unchanged.
1 – ADCBn address incremented or decremented, according to INCB field of DMACNTLn register.

INCB — The Increment/Decrement ADCBn field specifies the step size for the Device B address increment/decrement.
00 – Increment ADCBn register by 1.
01 – Increment ADCBn register by 2.
10 – Decrement ADCBn register by 1.
11 – Decrement ADCBn register by 2.

9.6.8 DMA Status Register (DMASTAT)

The DMA status register is a byte-wide, read register that holds the status information for the DMA channel n. This register is cleared at reset. The reserved bits always return zero when read. The VLD, OVR and TC bits are sticky (once set by the occurrence of the specific condition, they remain set until explicitly cleared by software). These bits can be individually cleared by writing 1 to the bit positions in the DMASTAT register to be cleared. Writing 0 to these bits has no effect

7 4	3	2	1	0
Reserved	VLD	CHAC	OVR	TC

TC — The Terminal Count bit indicates whether the transfer was completed by a terminal count condition (BLTCn Register reached 0).
0 – Terminal count condition did not occur.
1 – Terminal count condition occurred.

OVR — The behavior of the Channel Overrun bit depends on the operation mode (single buffer, double buffer, or auto-initialize) of the DMA channel.
In double-buffered mode (DMACNTLn.OT = 0):
The OVR bit is set when the present transfer is completed (BLTCn = 0), but the parameters for the next transfer (address and block length) are not valid (DMASTAT.VLD = 0).
In auto-initialize mode (DMACNTLn.OT = 1):
The OVR bit is set when the present transfer is completed (BLTCn = 0), and the DMASTAT.TC bit is still set.
In single-buffer mode:
Operates in the same way as double-buffer mode. In single-buffered mode, the DMASTAT.VLD bit should always be clear, so it will also be set when the DMASTAT.TC bit is set. Therefore, the OVR bit can be ignored in this mode.

CHAC — The Channel Active bit continuously indicates the active or inactive status of the channel, and therefore, it is read only. Data written to the CHAC bit is ignored.
0 – Channel inactive.
1 – Indicates that the channel is active (CHEN bit in the CNTLn register is 1 and BLTCn > 0)

VLD — The Transfer Parameters Valid bit specifies whether the transfer parameters for the next block to be transferred are valid. Writing the BLTRn register automatically sets this bit. The bit is cleared in the following cases:

- The present transfer is completed and the ADRAn, ADRBn (indirect mode only), and BLTR registers are copied to the ADCAn, ADCBn (indirect mode only), and BLTCn registers.
- Writing 1 to the VLD bit.

10.0 Interrupts

The Interrupt Control Unit (ICU) receives interrupt requests from internal and external sources and generates interrupts to the CPU. Interrupts from the timers, UARTs, Microwire/SPI interface, and Multi-Input Wake-Up are all maskable interrupts. The highest-priority interrupt is the Non-Maskable Interrupt (NMI), which is triggered by a falling edge received on the $\overline{\text{NMI}}$ input pin.

The priorities of the maskable interrupts are hardwired and therefore fixed. The interrupts are named IRQ0 through IRQ31, in which IRQ0 has the lowest priority and IRQ31 has the highest priority.

10.1 NON-MASKABLE INTERRUPTS

The Interrupt Control Unit (ICU) receives the external $\overline{\text{NMI}}$ input and generates the NMI signal driven to the CPU. The $\overline{\text{NMI}}$ input is an asynchronous input with Schmitt trigger characteristics and an internal synchronization circuit, therefore no external synchronizing circuit is needed. The $\overline{\text{NMI}}$ pin triggers an exception on its falling edge.

10.1.1 Non-Maskable Interrupt Processing

The CPU performs an interrupt acknowledge bus cycle when beginning to process a non-maskable interrupt. The address associated with this core bus cycle is within the internal core address space and may be monitored as a Core Bus Monitoring (CBM) clock cycle.

At reset, NMI interrupts are disabled and must remain disabled until software initializes the interrupt table, interrupt base register (INTBASE), and the interrupt mode. The external $\overline{\text{NMI}}$ interrupt is enabled by setting the EXNMI.ENLCK bit and will remain enabled until a reset occurs. Alternatively, the external $\overline{\text{NMI}}$ interrupt can be enabled by setting the EXNMI.EN bit and will remain enabled until an interrupt event or a reset occurs.

10.2 MASKABLE INTERRUPTS

The ICU receives level-triggered interrupt request signals from 31 internal sources and generates a vectored interrupt to the CPU when required. Priority among the interrupt sources (named IRQ1 through IRQ31) is fixed.

The maskable interrupts are globally enabled and disabled by the E bit in the PSR register. The EI and DI instructions are used to set (enable) and clear (disable) this bit. The global maskable interrupt enable bit (I bit in the PSR) must also be set before any maskable interrupts are taken.

Each interrupt source can be individually enabled or disabled under software control through the ICU interrupt enable registers and also through interrupt enable bits in the peripherals that request the interrupts. The CR16C core supports IRQ0, but in the CP3BT13 it is not connected to any interrupt source.

10.2.1 Maskable Interrupt Processing

Interrupt vector numbers are always positive, in the range 10h to 2Fh. The IVCT register contains the interrupt vector of the enabled and pending interrupt with the highest priority. The interrupt vector 10h corresponds to IRQ0 and the lowest priority, while the vector 2Fh corresponds to IRQ31 and the highest priority. The CPU performs an interrupt acknowledge bus cycle on receiving a maskable interrupt request from the ICU. During the interrupt acknowledge cycle, a byte is read from address FF FE00h (IVCT register). The byte is used as an index into the Dispatch Table to determine the address of the interrupt handler.

Because IRQ0 is not connected to any interrupt source, it would seem that the interrupt vector would never return the value 10h. If it does return a value of 10h, the entry in the dispatch table should point to a default interrupt handler that handles this error condition. One possible condition for this to occur is deassertion of the interrupt before the interrupt acknowledge cycle.

10.3 INTERRUPT CONTROLLER REGISTERS

Table 21 lists the ICU registers.

Table 21 Interrupt Controller Registers

Name	Address	Description
NMISTAT	FF FE02h	Non-Maskable Interrupt Status Register
EXNMI	FF FE04h	External NMI Trap Control and Status Register
IVCT	FF FE00h	Interrupt Vector Register
IENAM0	FF FE0Eh	Interrupt Enable and Mask Register 0
IENAM1	FF FE10h	Interrupt Enable and Mask Register 1
ISTAT0	FF FE0Ah	Interrupt Status Register 0
ISTAT1	FF FE0Ch	Interrupt Status Register 1

10.3.1 Non-Maskable Interrupt Status Register (NMISTAT)

The NMISTAT register is a byte-wide read-only register. It holds the status of the current pending Non-Maskable Interrupt (NMI) requests. On the CP3BT13, the external $\overline{\text{NMI}}$ input is the only source of NMI interrupts. The NMISTAT register is cleared on reset and each time its contents are read.

7 … 1	0
Reserved	EXT

EXT — The External NMI request bit indicates whether an external non-maskable interrupt request has occurred. Refer to the description of the EXNMI register below for additional details.
0 – No external NMI request.
1 – External NMI request has occurred.

10.3.2 External NMI Trap Control and Status Register (EXNMI)

The EXNMI register is a byte-wide read/write register. It indicates the current value of the $\overline{NMI}$ pin and controls the NMI interrupt trap generation based on a falling edge of the $\overline{NMI}$ pin. TST, EN and ENLCK are cleared on reset. When writing to this register, all reserved bits must be written with 0 for the device to function properly

7 – 3	2	1	0
Reserved	ENLCK	PIN	EN

EN — The EXNMI trap enable bit is one of two bits that can be used to enable NMI interrupts. The bit is cleared by hardware at reset and whenever the NMI interrupt occurs (EXNMI.EXT set). It is intended for applications where the $\overline{NMI}$ input toggles frequently but nested NMI traps are not desired. For these applications, the EN bit needs to be re-enabled before exiting the trap handler. When used this way, the ENLCK bit should never be set. The EN bit can be set and cleared by software (software can set this bit only if EXNMI.EXT is cleared), and should only be set after the interrupt base register and the interrupt stack pointer have been set up.
0 – NMI interrupts not enabled by this bit (but may be enabled by the ENLCK bit).
1 – NMI interrupts enabled.

PIN — The PIN bit indicates the state (non-inverted) on the $\overline{NMI}$ input pin. This bit is read-only, data written into it is ignored.
0 – $\overline{NMI}$ pin not asserted.
1 – $\overline{NMI}$ pin asserted.

ENLCK — The EXNMI trap enable lock bit is used to permanently enable NMI interrupts. Only a device reset can clear the ENLCK bit. This allows the external NMI feature to be enabled after the interrupt base register and the interrupt stack pointer have been set up. When the ENLCK bit is set, the EN bit is ignored.
0 – NMI interrupts not enabled by this bit (but may be enabled by the EN bit).
1 – NMI interrupts enabled.

10.3.3 Interrupt Vector Register (IVCT)

The IVCT register is a byte-wide read-only register which reports the encoded value of the highest priority maskable interrupt that is both asserted and enabled. The valid range is from 10h to 2Fh. The register is read by the CPU during an interrupt acknowledge bus cycle, and INTVECT is valid during that time. It may contain invalid data while INTVECT is updated.

7	6	5 – 0
0	0	INTVECT

INTVECT — The Interrupt Vector field indicates the highest priority interrupt which is both asserted and enabled.

10.3.4 Interrupt Enable and Mask Register 0 (IENAM0)

The IENAM0 register is a word-wide read/write register which holds bits that individually enable and disable the maskable interrupt sources IRQ1 through IRQ15. The register is initialized to FFFFh upon reset.

15 – 1	0
IENA	Res.

IENA — Each Interrupt Enable bit enables or disables the corresponding interrupt request IRQ1 through IRQ15, for example IENA15 controls IRQ15. Because IRQ0 is not used, IENA0 is ignored.
0 – Interrupt is disabled.
1 – Interrupt is enabled.

10.3.5 Interrupt Enable and Mask Register 1 (IENAM1)

The IENAM1 register is a word-wide read/write register which holds bits that individually enable and disable the maskable interrupt sources IRQ16 through IRQ31. The register is initialized to FFFFh at reset.

15 – 0
IENA

IENA — Each Interrupt Enable bit enables or disables the corresponding interrupt request IRQ16 through IRQ31, for example IENA15 controls IRQ31.
0 – Interrupt is disabled.
1 – Interrupt is enabled.

10.3.6 Interrupt Status Register 0 (ISTAT0)

The ISTAT0 register is a word-wide read-only register. It indicates which maskable interrupt inputs to the ICU are active. These bits are not affected by the state of the corresponding IENA bits.

15 … 1	0
IST	Res.

IST — The Interrupt Status bits indicate if a maskable interrupt source is signalling an interrupt request. IST[15:1] correspond to IRQ15 to IRQ1 respectively. Because the IRQ0 interrupt is not used, bit 0 always reads back 0.
0 – Interrupt is not active.
1 – Interrupt is active.

10.3.7 Interrupt Status Register 1 (ISTAT1)

The ISTAT1 register is a word-wide read-only register. It indicates which maskable interrupt inputs into the ICU are active. These bits are not affected by the state of the corresponding IENA bits.

15 … 0
IST

IST — The Interrupt Status bits indicate if a maskable interrupt source is signalling an interrupt request. IST[31:16] correspond to IRQ31 to IRQ16, respectively.
0 – Interrupt is not active.
1 – Interrupt is active.

10.4 MASKABLE INTERRUPT SOURCES

Table 22 shows the interrupts assigned to various on-chip maskable interrupts. The priority of simultaneous maskable interrupts is linear, with IRQ31 having the highest priority.

Table 22 Maskable Interrupts Assignment

IRQ Number	Details
IRQ31	TWM (Timer 0)
IRQ30	Bluetooth LLC 0
IRQ29	Bluetooth LLC 1
IRQ28	Bluetooth LLC 2
IRQ27	Bluetooth LLC 3
IRQ26	Bluetooth LLC 4
IRQ25	Bluetooth LLC 5
IRQ24	Reserved
IRQ23	DMA Channel 0
IRQ22	DMA Channel 1
IRQ21	DMA Channel 2
IRQ20	DMA Channel 3
IRQ19	CAN Interface
IRQ18	Advanced Audio Interface
IRQ17	UART Rx
IRQ16	CVSD/PCM Converter
IRQ15	ACCESS.bus Interface
IRQ14	TA (Timer input A)
IRQ13	TB (Timer input B)
IRQ12	VTUA (VTU Interrupt Request 1)
IRQ11	VTUB (VTU Interrupt Request 2)
IRQ10	VTUC (VTU Interrupt Request 3)
IRQ9	VTUD (VTU Interrupt Request 4)
IRQ8	Microwire/SPI Rx/Tx
IRQ7	UART Tx
IRQ6	UART $\overline{CTS}$
IRQ5	MIWU Interrupt 0
IRQ4	MIWU Interrupt 1
IRQ3	MIWU Interrupt 2
IRQ2	MIWU Interrupt 3
IRQ1	Flash Program/Data Memory
IRQ0	Reserved

All reserved or unused interrupt vectors should point to a default or error interrupt handlers.

10.5 NESTED INTERRUPTS

Nested NMI interrupts are always enabled. Nested maskable interrupts are disabled by default, however an interrupt handler can allow nested maskable interrupts by setting the I bit in the PSR. The LPR instruction is used to set the I bit.

Nesting of specific maskable interrupts can be allowed by disabling interrupts from sources for which nesting is not allowed, before setting the I bit. Individual maskable interrupt sources can be disabled using the IENAM0 and IENAM1 registers.

Any number of levels of nested interrupts are allowed, limited only by the available memory for the interrupt stack.

11.0 Triple Clock and Reset

The Triple Clock and Reset module generates a 12 MHz Main Clock and a 32.768 kHz Slow Clock from external crystal networks or external clock sources. It provides various clock signals for the rest of the chip. It also provides the main system reset signal, a power-on reset function, Main Clock prescalers to generate two additional low-speed clocks, and a 32-kHz oscillator start-up delay.

Figure 3 is block diagram of the Triple Clock and Reset module.

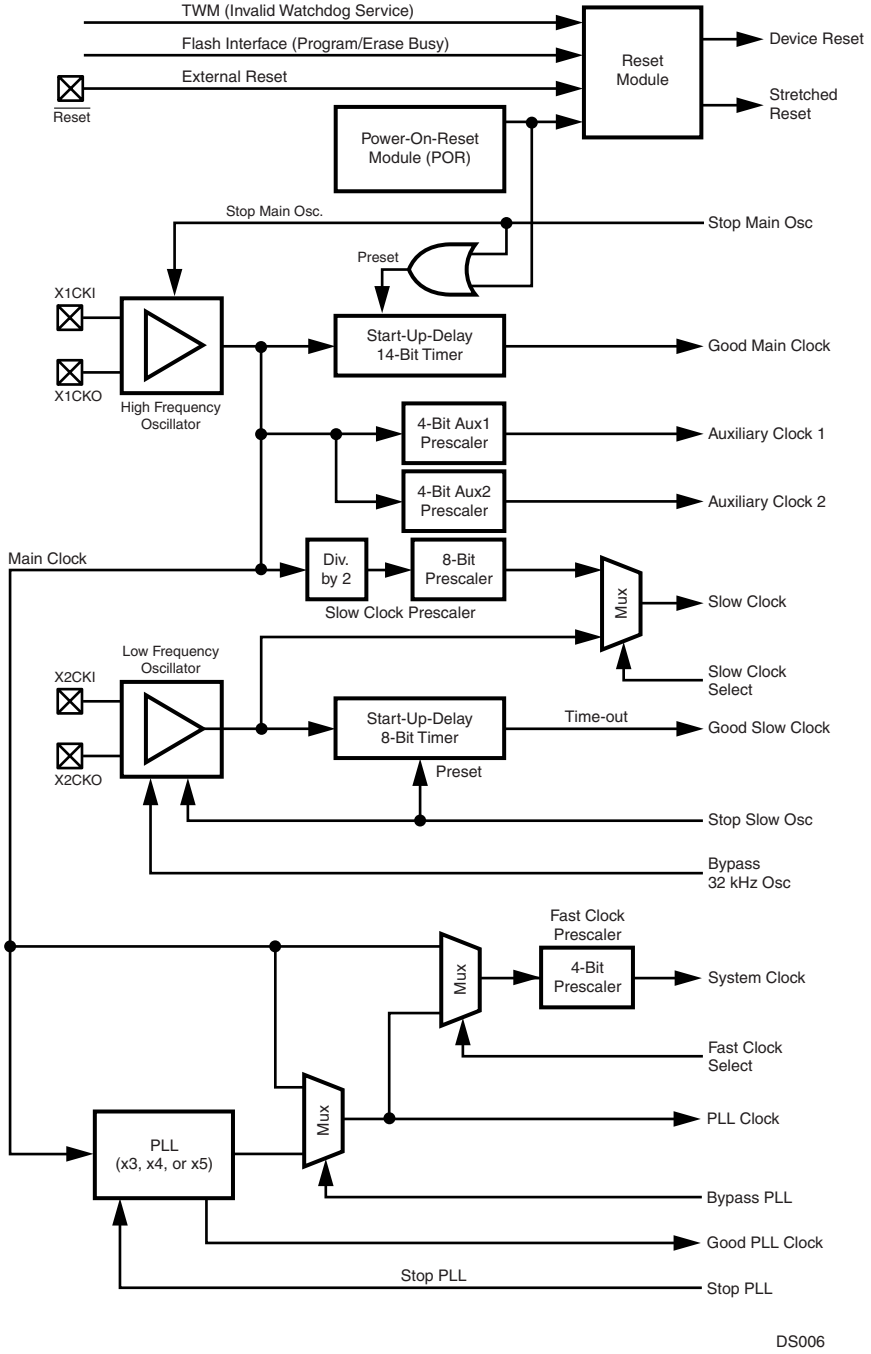

Figure 3. Triple Clock and Reset Module

11.1 EXTERNAL CRYSTAL NETWORK

An external crystal network is connected to the X1CKI and X1CKO pins to generate the Main Clock, unless an external clock signal is driven on the X1CKI pin. A similar external crystal network may be used at pins X2CKI and X2CKO for the Slow Clock. If an external crystal network is not used for the Slow Clock, the Slow Clock is generated by dividing the fast Main Clock.

The crystal network you choose may require external components different from the ones specified in this datasheet. In this case, consult with National's engineers for the component specifications

The crystals and other oscillator components must be placed close to the X1CKI/X1CKO and X2CKI/X2CKO device input pins to keep the printed trace lengths to an absolute minimum.

Figure 4 shows the required crystal network at X1CKI/X1CKO and optional crystal network at X2CKI/X2CKO. Table 23 shows the component specifications for the main crystal network and Table 24 shows the component specifications for the 32.768 kHz crystal network.

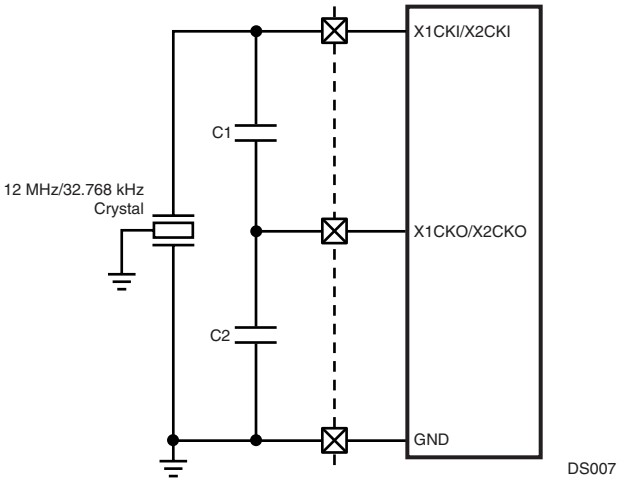

Figure 4. External Crystal Network

Table 23 Component Values of the High Frequency Crystal Circuit

Component	Parameters	Values	Tolerance
Crystal	Resonance Frequency Type Max. Serial Resistance Max. Shunt Capacitance Load Capacitance	12 MHz ± 20 ppm AT-Cut 50 Ω 7 pF 22 pF	N/A
Capacitor C1, C2	Capacitance	22 pF	20%

Table 24 Component Values of the Low Frequency Crystal Circuit

Component	Parameters	Values	Tolerance
Crystal	Resonance Frequency Type Maximum Serial Resistance Maximum Shunt Capacitance Load Capacitance Min. Q factor	32.768 kHz Parallel N-Cut or XY-bar 40 kΩ 2 pF 12.5 pF 40000	N/A
Capacitor C1, C2	Capacitance	25 pF	20%

Choose capacitor component values in the tables to obtain the specified load capacitance for the crystal when combined with the parasitic capacitance of the trace, socket, and package (which can vary from 0 to 8 pF). As a guideline, the load capacitance is:

$$CL = \frac{C1 \times C2}{C1 + C2} + Cparasitic$$

C2 > C1

C1 can be trimmed to obtain the desired load capacitance. The start-up time of the 32.768 kHz oscillator can vary from one to six seconds. The long start-up time is due to the high Q value and high serial resistance of the crystal necessary to minimize power consumption in Power Save mode.

11.2 MAIN CLOCK

The Main Clock is generated by the 12-MHz high-frequency oscillator or driven by an external signal (typically the LMX5252 RF chip). It can be stopped by the Power Management Module to reduce power consumption during periods of reduced activity. When the Main Clock is restarted, a 14-bit timer generates a Good Main Clock signal after a start-up delay of 32,768 clock cycles. This signal is an indicator that the high-frequency oscillator is stable.

The Stop Main Osc signal from the Power Management Module stops and starts the high-frequency oscillator. When this signal is asserted, it presets the 14-bit timer to 3FFFh and stops the high-frequency oscillator. When the signal goes inactive, the high-frequency oscillator starts and the 14-bit timer counts down from its preset value. When the timer reaches zero, it stops counting and asserts the Good Main Clock signal.

11.3 SLOW CLOCK

The Slow Clock is necessary for operating the device in reduced power modes and to provide a clock source for modules such as the Timing and Watchdog Module.

The Slow Clock operates in a manner similar to the Main Clock. The Stop Slow Osc signal from the Power Management Module stops and starts the low-frequency (32.768 kHz) oscillator. When this signal is asserted, it presets a 6-bit timer to 3Fh and disables the low-frequency oscillator. When the signal goes inactive, the low-frequency oscillator starts, and the 6-bit timer counts down from its preset value. When the timer reaches zero, it stops counting and asserts the Good Slow Clock signal, which indicates that the Slow Clock is stable.

For systems that do not require a reduced power consumption mode, the external crystal network may be omitted for the Slow Clock. In that case, the Slow Clock can be synthesized by dividing the Main Clock by a prescaler factor. The prescaler circuit consists of a fixed divide-by-2 counter and a programmable 8-bit prescaler register. This allows a choice of clock divisors ranging from 2 to 512. The resulting Slow Clock frequency must not exceed 100 kHz.

A software-programmable multiplexer selects either the prescaled Main Clock or the 32.768 kHz oscillator as the Slow Clock. At reset, the prescaled Main Clock is selected, ensuring that the Slow Clock is always present initially. Selection of the 32.768 kHz oscillator as the Slow Clock disables the clock prescaler, which allows the CLK1 oscillator to be turned off, which reduces power consumption and radiated emissions. This can be done only if the module detects a toggling low-speed oscillator. If the low-speed oscillator is not operating, the prescaler remains available as the Slow Clock source.

11.4 PLL CLOCK

The PLL Clock is generated by the PLL from the 12 MHz Main Clock by applying a multiplication factor of ×3, ×4, or ×5.

To enable the PLL:

1. Set the PLL multiplication factor in PRFSC.MODE.
2. Clear the PLL power-down bit CRCTRL.PLLPWD.
3. Clear the high-frequency clock select bit CRCTRL.FCLK.
4. Read CRCTRL.FCLK, and go back to step 3 if not clear.

The CRCTRL.FCLK bit will be clear only after the PLL has stabilized, so software must repeat step 3 until the bit is clear. The clock source can be switched back to the Main Clock by setting the CRCTRL.FCLK bit.

The PRSFC register must not be modified while the System Clock is derived from the PLL Clock. The System Clock must be derived from the low-frequency oscillator clock while the MODE field is modified.

11.5 SYSTEM CLOCK

The System Clock drives most of the on-chip modules, including the CPU. Typically, it is driven by the Main Clock, but it can also be driven by the PLL. In either case, the clock signal is passed through a programmable divider (scale factors from ÷1 to ÷16).

11.6 AUXILIARY CLOCKS

Auxiliary Clock 1 and Auxiliary Clock 2 are generated from Main Clock for use by certain peripherals. Auxiliary Clock 1 is available for the Bluetooth controller and the Advanced Audio Interface. Auxiliary Clock 2 is available for the CVSD/PCM transcoder. The Auxiliary clocks may be configured to keep these peripherals running when the System Clock is slowed down or suspended during low-power modes.

11.7 POWER-ON RESET

The CP3BT13 has specific Power On Reset (POR) timing requirements that must be met to prevent corruption of the on-chip flash program and data memories. This timing sequence shown in Figure 5.

All reset circuits must ensure that this timing sequence is always maintained during power-up and power-down. The design of the power supply also affects how this sequence is implemented.

The power-up sequence is:

1. The $\overline{\text{RESET}}$ pin must be held low until *both* IOVCC and VCC have reached the minimum levels specified in the DC Characteristics section. IOVCC and VCC are allowed to reach their nominal levels at the same time which is the best-case scenario.
2. After both of these supply voltage rails have met this condition, then the $\overline{\text{RESET}}$ pin may be driven high. At power-up an internal 14-bit counter is set to 3FFFh and begins counting down to 0 after the crystal oscillator becomes stable. When this counter reaches 0, the on-chip $\overline{\text{RESET}}$ signal is driven high unless the external $\overline{\text{RESET}}$ pin is still being held low. This prevents the CP3BT13 from coming out of reset with an unstable clock source.

The power-down sequence is:

1. The $\overline{\text{RESET}}$ pin must be driven low as soon as *either* the IOVCC or VCC voltage rail reaches the minimum levels specified in the DC Characteristics.
2. The $\overline{\text{RESET}}$ pin must then be held low until the Main Clock is stopped. The Main Clock will decay with the same profile as IOVCC.

Meeting the power-down reset conditions ensures that software will not be executed at voltage levels that may cause incorrect program execution or corruption of the flash memories. This situation must be avoided because the Main Clock decays with the IOVCC supply rather than stopping immediately when IOVCC falls below the minimum specified level.

The external reset circuits presented in the following sections provide varying levels of additional fault tolerance and expandability and are presented as possible examples of solutions to be used with the CP3BT13. It is important to note, however, that any design for the reset circuit and power supply must meet the timing requirements shown in Figure 5.

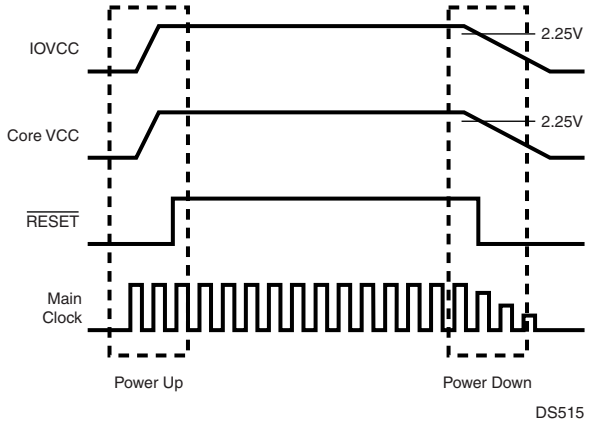

Figure 5. Power-On Reset Timing

11.7.1 Simple External Reset

A simple external reset circuit with brown-out and glitch protection based on the LM809 3-Pin Microprocessor Reset Circuit is shown in Figure 6. The LM809 produces a 240-ms logic low reset pulse when the power supply rises above a threshold voltage. Various reset thresholds are available for the LM809, however the options for 2.93V and 3.08V are most suitable for a CP3BT13 device operating from an IOVCC at 3.0V to 3.3V.

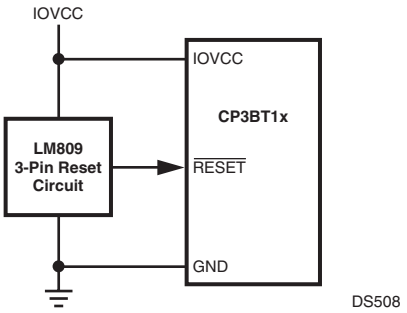

Figure 6. Simple External Reset

11.7.2 Manual and SDI External Reset

An external reset circuit based on the LM3724 5-Pin Microprocessor Reset Circuit is shown in Figure 7. The LM3724 produces a 190-ms logic low reset pulse when the power supply rises above a threshold voltage or a manual reset button is pressed. Various reset thresholds are available for the LM3724, however the option for 3.08V is most suitable for a CP3BT13 device operating from an IOVCC at 3.3V.

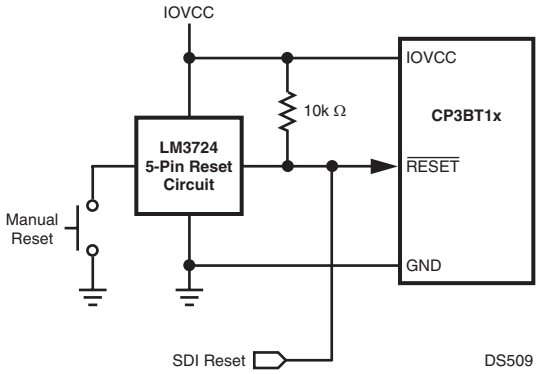

Figure 7. Manual and SDI External Reset

The LM3724 provides a debounced input for a manual pushbutton reset switch. It also has an open-drain output which can be used for implementing a wire-OR connection with a reset signal from a serial debug interface. This circuit is typical of a design to be used in a development or evaluation environment, however it is a good recommendation for all general CP3BT13 designs. If an SDI interface is not implemented, an LM3722 with active pullup may be used.

11.7.3 Fault-Tolerant External Reset

An external reset circuit based on the LM3710 Microprocessor Supervisory Circuit is shown in Figure 8. It provides a high level of fault tolerance in that it provides the ability to monitor both the VCC supply for the core logic and the IOVCC supply. It also provides a low-voltage indication for the IOVCC supply and an external watchdog timer.

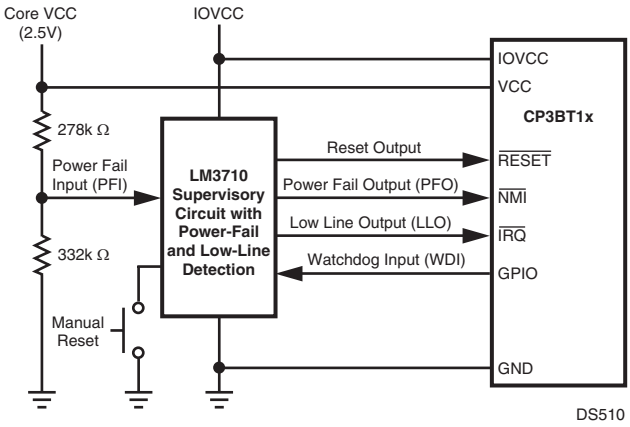

Figure 8. Fault-Tolerant External Reset

The signals shown in Figure 8 are:

- *Core VCC*—the 2.5V power supply rail for the core logic.
- *IOVCC*—the 2.5–3.3V power supply rail for the I/O logic.
- *Watchdog Input (WDI)*—this signal is asserted by the CP3BT13 at regular intervals to indicate normal operation. A general-purpose I/O (GPIO) port may be used to provide this signal. If the internal watchdog timer in the CP3BT13 is used, then the LM3704 Microprocessor Supervisory Circuit can provide the same features as the LM3710 but without the watchdog timer.
- *$\overline{RESET}$*—an active-low reset signal to the CP3BT13. The LM3710 is available in versions with active pullup or an open-drain RESET output.
- *Power-Fail Input (PFI)*—this is a voltage level derived from the Core VCC power supply rail through a simple resistor divider network.
- *Power-Fail Output (PFO)*—this signal is asserted when the voltage on PFI falls below 1.225V. PFO is connected to the non-maskable interrupt ($\overline{NMI}$) input on the CP3BT13. A system shutdown routine can then be invoked by the $\overline{NMI}$ handler.
- *Low Line Output (LLO)*—this signal is asserted when the main IOVCC level fails below a warning threshold voltage but remains above a reset detection threshold. This signal may be routed to the $\overline{NMI}$ input on the CP3BT13 or to a separate interrupt input.

These additional status and feedback mechanisms allow the CP3BT13 to recover from software hangs or perform system shutdown functions before being placed into reset.

The standard reset threshold for the LM3710 is 3.08V with other options for different watchdog timeout and reset timeouts. The selection of these values are much more application-specific. The combination of a watchdog timeout period of 1600 ms and a reset period of 200 ms is a reasonable starting point.

11.8 CLOCK AND RESET REGISTERS

Table 25 lists the clock and reset registers.

Table 25 Clock and Reset Registers

Name	Address	Description
CRCTRL	FF FC40h	Clock and Reset Control Register
PRSFC	FF FC42h	High Frequency Clock Prescaler Register
PRSSC	FF FC44h	Low Frequency Clock Prescaler Register
PRSAC	FF FC46h	Auxiliary Clock Prescaler Register

11.8.1 Clock and Reset Control Register (CRCTRL)

The CRCTRL register is a byte-wide read/write register that controls the clock selection and contains the power-on reset status bit. At reset, the CRCTRL register is initialized as described below:

7	6	5	4	3	2	1	0
Reserved		POR	ACE2	ACE1	PLLPWD	FCLK	SCLK

SCLK — The Slow Clock Select bit controls the clock source used for the Slow Clock.
0 – Slow Clock driven by prescaled Main Clock.
1 – Slow Clock driven by 32.768 kHz oscillator.

FCLK — The Fast Clock Select bit selects between the 12 MHz Main Clock and the PLL as the source used for the System Clock. After reset, the Main Clock is selected. Attempting to switch to the PLL while the PLLPWD bit is set (PLL is turned off) is ignored. Attempting to switch to the PLL also has no effect if the PLL output clock has not stabilized.
0 – The System Clock prescaler is driven by the output of the PLL.
1 – The System Clock prescaler is driven by the 12-MHz Main Clock. This is the default after reset.

PLLPWD — The PLL Power-Down bit controls whether the PLL is active or powered down (Stop PLL signal asserted). When this bit is set, the on-chip PLL stays powered-down. Otherwise it is powered-up or it can be controlled by the Power Management Module, respectively. Before software can power-down the PLL in Active mode by setting the PLLPWD bit, the FCLK bit must be set. Attempting to set the PLLPWD bit while the FCLK bit is clear is ignored. The FCLK bit cannot be cleared until the PLL clock has stabilized. After reset this bit is set.
0 – PLL is active.
1 – PLL is powered down.

ACE1 When the Auxiliary Clock Enable bit is set and a stable Main Clock is provided, the Auxiliary Clock 1 prescaler is enabled and generates the first Auxiliary Clock. When the ACE1 bit is clear or the Main Clock is not stable, Auxiliary Clock 1 is stopped. Auxiliary Clock 1 is used as the clock input for the Bluetooth LLC and the audio interface. After reset this bit is clear.
0 – Auxiliary Clock 1 is stopped.
1 – Auxiliary Clock 1 is active if the Main Clock is stable.

ACE2 When the Auxiliary Clock Enable 2 bit is set and a stable Main Clock is provided, the Auxiliary Clock 2 prescaler is enabled and generates Auxiliary Clock 2. When the ACE2 bit is clear or the Main Clock is not stable, the Auxiliary Clock 2 is stopped. Auxiliary Clock 2 is used as the clock input for the CVSD/PCM transcoder. After reset this bit is clear.
0 – Auxiliary Clock 2 is stopped.
1 – Auxiliary Clock 2 is active if the Main Clock is stable.

POR Power-On-Reset - The Power-On-Reset bit is set when a power-turn-on condition has been detected. This bit can only be cleared by software, not set. Writing a 1 to this bit will be ignored, and the previous value of the bit will be unchanged.
0 – Software cleared this bit.
1 – Software has not cleared his bit since the last reset.

11.8.2 High Frequency Clock Prescaler Register (PRSFC)

The PRSFC register is a byte-wide read/write register that holds the 4-bit clock divisor used to generate the high-frequency clock. In addition, the upper three bits are used to control the operation of the PLL. The register is initialized to 4Fh at reset (except in PROG mode.)

7	6 – 4	3 – 0
Res	MODE	FCDIV

FCDIV The Fast Clock Divisor specifies the divisor used to obtain the high-frequency System Clock from the PLL or Main Clock. The divisor is (FCDIV + 1).

MODE The PLL MODE field specifies the operation mode of the on-chip PLL. After reset the MODE bits are initialized to 100b, so the PLL is configured to generate a 48-MHz clock. This register must not be modified when the System Clock is derived from the PLL Clock. The System Clock must be derived from the low-frequency oscillator clock while the MODE field is modified.

MODE2:0	Output Frequency (from 12 MHz input clock)	Description
000	Reserved	Reserved
001	Reserved	Reserved
010	Reserved	Reserved
011	36 MHz	3× Mode
100	48 MHz	4× Mode
101	60 MHz	5× Mode
110	Reserved	Reserved
111	Reserved	Reserved

11.8.3 Low Frequency Clock Prescaler Register (PRSSC)

The PRSSC register is a byte-wide read/write register that holds the clock divisor used to generate the Slow Clock from the Main Clock. The register is initialized to B6h at reset.

7 – 0
SCDIV

SCDIV The Slow Clock Divisor field specifies a divisor to be used when generating the Slow Clock from the Main Clock. The Main Clock is divided by a value of (2 × (SCDIV + 1)) to obtain the Slow Clock. At reset, the SCDIV register is initialized to B6h, which generates a Slow Clock rate of 32786.89 Hz. This is about 0.5% faster than a Slow Clock generated from an external 32768 Hz crystal network.

11.8.4 Auxiliary Clock Prescaler Register (PRSAC)

The PRSAC register is a byte-wide read/write register that holds the clock divisor values for prescalers used to generate the two auxiliary clocks from the Main Clock. The register is initialized to FFh at reset.

7 – 4	3 – 0
ACDIV2	ACDIV2

ACDIV1 The Auxiliary Clock Divisor 1 field specifies the divisor to be used for generating Auxiliary Clock 1 from the Main Clock. The Main Clock is divided by a value of (ACDIV1 + 1).

ACDIV2 The Auxiliary Clock Divisor 2 field specifies the divisor to be used for generating Auxiliary Clock 2 from the Main Clock. The Main Clock is divided by a value of (ACDIV2 + 1).

12.0 Power Management

The Power Management Module (PMM) improves the efficiency of the CP3BT13 by changing the operating mode (and therefore the power consumption) according to the required level of device activity. The device implements four power modes:

- Active
- Power Save
- Idle
- Halt

Table 26 summarizes the differences between power modes: the state of the high-frequency oscillator (on or off), the System Clock source (clock used by most modules), and the clock source used by the Timing and Watchdog Module (TWM). The high-frequency oscillator generates the 12-MHz Main Clock, and the low-frequency oscillator generates a 32.768 kHz clock. The Slow Clock can be driven by the 32.768 kHz clock or a scaled version of the Main Clock.

Table 26 Power Mode Operating Summary

Mode	High-Frequency Oscillator	System Clock	TWM Clock
Active	On	Main Clock	Slow Clock
Power Save	On or Off	Slow Clock	Slow Clock
Idle	Off	None	Slow Clock
Halt	Off	None	None

The low-frequency oscillator continues to operate in all four modes and power must be provided continuously to the device power supply pins. In Halt mode, however, Slow Clock does not toggle, and as a result, the TWM timer and Watchdog Module do not operate. In Power Save mode, the high-frequency oscillator can be turned on or off under software control, as long as the low-frequency oscillator is used to drive Slow Clock.

12.1 ACTIVE MODE

In Active mode, the high-frequency oscillator is active and generates the 12-MHz Main Clock. The 32.768 kHz oscillator is active and may be used to generate the Slow Clock. The PLL can be active or inactive, as required. Most on-chip modules are driven by the System Clock. The System Clock can be the PLL Clock after a programmable divider or the 12-MHz Main Clock. The activity of peripheral modules is controlled by their enable bits.

Power consumption can be reduced in this mode by selectively disabling modules and by executing the WAIT instruction. When the WAIT instruction is executed, the CPU stops executing new instructions until it receives an interrupt signal. After reset, the CP3BT13 is in Active Mode.

12.2 POWER SAVE MODE

In Power Save mode, Slow Clock is used as the System Clock which drives the CPU and most on-chip modules. If Slow Clock is driven by the 32.768 kHz oscillator and no on-chip module currently requires the 12-MHz Main Clock, software can disable the high-frequency oscillator to further reduce power consumption. Auxiliary Clocks 1 and 2 can be turned off under software control before switching to a reduced power mode, or they may remain active as long as Main Clock is also active. If the system does not require the PLL output clock, the PLL can be disabled. Alternatively, the Main Clock and the PLL can also be controlled by the Hardware Clock Control function, if enabled. The clock architecture is described in Section 11.0.

The Bluetooth LLC can either be switched to the 32 kHz clock internally in the module, or it remains running off Auxiliary clock 1 as long as the Main Clock and Auxiliary Clock 1 are enabled.

In Power Save mode, some modules are disabled or their operation is restricted. Other modules, including the CPU, continue to function normally, but operate at a reduced clock rate. Details of each module's activity in Power Save mode are described in each module's descriptions.

It is recommended to keep CPU activity at a minimum by executing the WAIT instruction to guarantee low power consumption in the system.

12.3 IDLE MODE

In Idle mode, the System Clock is disabled and therefore the clock is stopped to most modules of the device. The DHC and DMC bits in the PMMCR register must be set before entering this mode to disable the PLL and the high-frequency oscillator. The low-frequency oscillator remains active. The Power Management Module (PMM) and the Timing and Watchdog Module (TWM) continue to operate off the Slow Clock. Idle mode can only be entered from Active mode.

12.4 HALT MODE

In Halt mode, all the device clocks, including the System Clock, Main Clock, and Slow Clock, are disabled. The DHC and DMC bits in the PMMCR register must be set before entering this mode. The high-frequency oscillator and PLL are off. The low-frequency oscillator continues to operate, however its circuitry is optimized to guarantee lowest possible power consumption. This mode allows the device to reach the absolute minimum power consumption without losing its state (memory, registers, etc.). Halt mode can only be entered from Active mode.

12.5 HARDWARE CLOCK CONTROL

The Hardware Clock Control (HCC) mechanism gives the Bluetooth Lower Link Controller (LLC) individual control over the high-frequency oscillator and the PLL. The Bluetooth LLC can enter a Sleep mode for a specified number of low-frequency clock cycles. While the Bluetooth LLC is in Sleep mode and the CP3BT13 is in Power Save mode, the HCC mechanism may be used to control whether the high-frequency oscillator, PLL, or both units are disabled.

Altogether, three mechanisms control whether the high-frequency oscillator is active, and four mechanisms control whether the PLL is active:

- **HCC Bits:** The HCCM and HCCH bits in the PMMCR register may be used to disable the high-frequency oscillator and PLL, respectively, in Power Save mode when the Bluetooth LLC is in Sleep mode.
- **Disable Bits:** The DMC and DHC bits in the PMMCR register may be used to disable the high-frequency oscillator and PLL, respectively, in Power Save mode. These bits must be set in Idle and Halt mode. When used to disable the high-frequency oscillator or PLL, the DMC and DHC bits override the HCC mechanism.
- **Power Management Mode:** Halt mode disables the high-frequency oscillator and PLL. Active Mode enables them. The DMC and DHC bits and the HCC mechanism have no effect in Active or Halt mode.
- **PLL Power Down Bit:** The PLLPWD bit in the CRCTRL register can be used to disable the PLL in all modes. This bit does not affect the high-frequency oscillator.

12.6 POWER MANAGEMENT REGISTERS

Table 27 lists the power management registers.

Table 27 Power Management Registers

Name	Address	Description
PMMCR	FF FC60h	Power Management Control Register
PMMSR	FF FC62h	Power Management Status Register

12.6.1 Power Management Control Register (PMMCR)

The Power Management Control/Status Register (PMMCR) is a byte-wide, read/write register that controls the operating power mode (Active, Power Save, Idle, or Halt) and enables or disables the high-frequency oscillator and PLL in the Power Save mode. At reset, the non-reserved bits of this register are cleared. The format of the register is shown below.

7	6	5	4	3	2	1	0
HCCH	HCCM	DHC	DMC	WBPSM	HALT	IDLE	PSM

PSM — If the Power Save Mode bit is clear and the WBPSM bit is clear, writing 1 to the PSM bit causes the device to start the switch to Power Save mode. If the WBPSM bit is set when the PSM bit is written with 1, entry into Power Save mode is delayed until execution of a WAIT instruction. The PSM bit becomes set after the switch to Power Save mode is complete. The PSM bit can be cleared by software, and it can be cleared by hardware when a hardware wake-up event is detected.
0 – Device is not in Power Save mode.
1 – Device is in Power Save mode.

IDLE — The Idle Mode bit indicates whether the device has entered Idle mode. The WBPSM bit must be set to enter Idle mode. When the IDLE bit is written with 1, the device enters IDLE mode at the execution of the next WAIT instruction. The IDLE bit can be set and cleared by software. It is also cleared by the hardware when a hardware wake-up event is detected.
0 – Device is not in Idle mode.
1 – Device is in Idle mode.

HALT — The Halt Mode bit indicates whether the device is in Halt mode. Before entering Halt mode, the WBPSM bit must be set. When the HALT bit is written with 1, the device enters the Halt mode at the execution of the next WAIT instruction. When in HALT mode, the PMM stops the System Clock and then turns off the PLL and the high-frequency oscillator. The HALT bit can be set and cleared by software. The Halt mode is exited by a hardware wake-up event. When this signal is set high, the oscillator is started. After the oscillator has stabilized, the HALT bit is cleared by the hardware.
0 – Device is not in Halt mode.
1 – Device is in Halt mode.

WBPSM — When the Wait Before Power Save Mode bit is clear, a switch from Active mode to Power Save mode only requires setting the PSM bit. When the WBPSM bit is set, a switch from Active mode to Power Save, Idle, or Halt mode is performed by setting the PSM, IDLE, or HALT bit, respectively, and then executing a WAIT instruction. Also, if the DMC or DHC bits are set, the high-frequency oscillator and PLL may be disabled only after a WAIT instruction is executed and the Power Save, Idle, or Halt mode is entered.
0 – Mode transitions may occur immediately.
1 – Mode transitions are delayed until the next WAIT instruction is executed.

DMC — The Disable Main Clock bit may be used to disable the high-frequency oscillator in Power Save mode. In Active mode, the high-frequency oscillator is enabled without regard to the DMC value. The DMC bit is cleared by hardware when a hardware wake-up event is detected. This bit must be set in Idle and Halt modes.
0 – High-frequency oscillator is not disabled in Power Save mode, unless disabled by the HCC mechanism.
1 – High-frequency oscillator is disabled in Power Save mode.

DHC — The Disable High-Frequency (PLL) Clock bit and may be used to disable the PLL in Power Save modes. When the DHC bit is clear (and PLLPWD = 0), the PLL is enabled in Power Save mode. If the DHC bit is set, the PLL is disabled in Power Save mode. The DHC bit is cleared by hardware when a hardware wake-

up event is detected. This bit must be set in Idle and Halt modes.

0 – PLL is not disabled in Power Save mode, unless disabled by the HCC mechanism or the PLLPWD bit.

1 – PLL is disabled in Power Save mode.

HCCM The Hardware Clock Control for Main Clock bit may be used in Power Save and Idle modes to disable the high-frequency oscillator conditionally, depending on whether the Bluetooth LLC is in Sleep mode. The DMC bit must be clear for this mechanism to operate. The HCCM bit is automatically cleared when the device enters Active mode.

0 – High-frequency oscillator is disabled in Power Save or Idle mode only if the DMC bit is set.

1 – High-frequency oscillator is also disabled if the Bluetooth LLC is idle.

HCCH The Hardware Clock Control for High-Frequency (PLL) bit may be used in Power Save and Idle modes to disable the PLL conditionally, depending on whether the Bluetooth LLC is in Sleep mode. The DHC bit and the CRCTRL.PLLPWD bit must be clear for this mechanism to operate. The HCCH bit is automatically cleared when the device enters Active mode.

0 – PLL is disabled in Power Save or Idle mode only if the DMC bit or the CRCTRL.PLLPWD bit is set.

1 – PLL is also disabled if the Bluetooth LLC is idle.

12.6.2 Power Management Status Register (PMMSR)

The Management Status Register (PMMR) is a byte-wide, read/write register that provides status signals for the various clocks. The reset value of PMSR register bits 0 to 2 depend on the status of the clock sources monitored by the PMM. The upper 5 bits are clear after reset. The format of the register is shown below.

7 – 3	2	1	0
Reserved	OHC	OMC	OLC

OLC The Oscillating Low Frequency Clock bit indicates whether the low-frequency oscillator is producing a stable clock. When the low-frequency oscillator is unavailable, the PMM will not switch to Power Save, Idle, or Halt mode.

0 – Low-frequency oscillator is unstable, disabled, or not oscillating.

1 – Low-frequency oscillator is available.

OMC The Oscillating Main Clock bit indicates whether the high-frequency oscillator is producing a stable clock. When the high-frequency oscillator is unavailable, the PMM will not switch to Active mode.

0 – High-frequency oscillator is unstable, disabled, or not oscillating.

1 – High-frequency oscillator is available.

OHC The Oscillating High Frequency (PLL) Clock bit indicates whether the PLL is producing a stable clock. Because the PMM tests the stability of the PLL clock to qualify power mode state transitions, a stable clock is indicated when the PLL is disabled. This removes the stability of the PLL clock from the test when the PLL is disabled. When the PLL is enabled but unstable, the PMM will not switch to Active mode.

0 – PLL is enabled but unstable.

1 – PLL is stable or disabled (CRCTRL.PLLPWD = 0).

12.7 SWITCHING BETWEEN POWER MODES

Switching from a higher to a lower power consumption mode is performed by writing an appropriate value to the Power Management Control/Status Register (PMMCR). Switching from a lower power consumption mode to the Active mode is usually triggered by a hardware interrupt. Figure 9 shows the four power consumption modes and the events that trigger a transition from one mode to another.

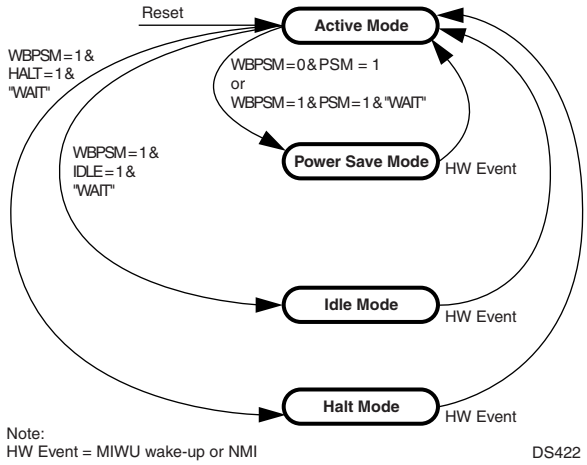

Figure 9. Power Mode State Diagram

Some of the power-up transitions are based on the occurrence of a wake-up event. An event of this type can be either a maskable interrupt or a non-maskable interrupt (NMI). All of the maskable hardware wake-up events are monitored by the Multi-Input Wake-Up (MIWU) Module, which is active in all modes. Once a wake-up event is detected, it is latched until an interrupt acknowledge cycle occurs or a reset is applied.

A wake-up event causes a transition to the Active mode and restores normal clock operation, but does not start execution of the program. It is the interrupt handler associated

with the wake-up source (MIWU or NMI) that causes program execution to resume.

12.7.1 Active Mode to Power Save Mode

A transition from Active mode to Power Save mode is performed by writing a 1 to the PMMCR.PSM bit. The transition to Power Save mode is either initiated immediately or at execution of the next WAIT instruction, depending on the state of the PMMCR.WBPSM bit.

For an immediate transition to Power Save mode (PMMCR.WBPSM = 0), the CPU continues to operate using the low-frequency clock. The PMMCR.PSM bit becomes set when the transition to the Power Save mode is completed.

For a transition at the next WAIT instruction (PMMCR.WBPSM = 1), the CPU continues to operate in Active mode until it executes a WAIT instruction. At execution of the WAIT instruction, the device enters the Power Save mode, and the CPU waits for the next interrupt event. In this case, the PMMCR.PSM bit becomes set when it is written, even before the WAIT instruction is executed.

12.7.2 Entering Idle Mode

Entry into Idle mode is performed by writing a 1 to the PMMCR.IDLE bit and then executing a WAIT instruction. The PMMCR.WBPSM bit must be set before the WAIT instruction is executed. Idle mode can be entered only from the Active mode. The DHC and DMC bits must be set when entering Idle mode.

12.7.3 Disabling the High-Frequency Clock

When the low-frequency oscillator is used to generate the Slow Clock, power consumption can be reduced further in the Power Save mode by disabling the high-frequency oscillator. This is accomplished by writing a 1 to the PMMCR.DHC bit before executing the WAIT instruction that puts the device in the Power Save mode. The high-frequency clock is turned off only after the device enters the Power Save mode.

The CPU operates on the low-frequency clock in Power Save mode. It can turn off the high-frequency clock at any time by writing a 1 to the PMMCR.DHC bit. The high-frequency oscillator is always enabled in Active mode and always disabled in Halt mode, without regard to the PMMCR.DHC bit setting.

Immediately after power-up and entry into Active mode, software must wait for the low-frequency clock to become stable before it can put the device in Power Save mode. It should monitor the PMMSR.OLC bit for this purpose. Once this bit is set, Slow Clock is stable and Power Save mode can be entered.

12.7.4 Entering Halt Mode

Entry into Halt mode is accomplished by writing a 1 to the PMMCR.HALT bit and then executing a WAIT instruction. The PMMCR.WBPSM bit must be set before the WAIT instruction is executed. Halt mode can be entered only from Active mode. The DHC and DMC bits must be set when entering Idle mode.

12.7.5 Software-Controlled Transition to Active Mode

A transition from Power Save mode to Active mode can be accomplished by either a software command or a hardware wake-up event. The software method is to write a 0 to the PMMCR.PSM bit. The value of the register bit changes only after the transition to the Active mode is completed.

If the high-frequency oscillator is disabled for Power Save operation, the oscillator must be enabled and allowed to stabilize before the transition to Active mode. To enable the high-frequency oscillator, software writes a 0 to the PMMCR.DMC bit. Before writing a 0 to the PMMCR.PSM bit, software must first monitor the PMMSR.OMC bit to determine when the oscillator has stabilized.

12.7.6 Wake-Up Transition to Active Mode

A hardware wake-up event switches the device directly from Power Save, Idle, or Halt mode to Active mode. Hardware wake-up events are:

- Non-Maskable Interrupt (NMI)
- Valid wake-up event on a Multi-Input Wake-Up channel

When a wake-up event occurs, the on-chip hardware performs the following steps:

1. Clears the PMMCR.DMC bit, which enables the high-frequency clock (if it was disabled).
2. Waits for the PMMSR.OMC bit to become set, which indicates that the high-frequency clock is operating and is stable.
3. Clears the PMMCR.DHC bit, which enables the PLL.
4. Waits for the PMMSR.OHC bit to become set.
5. Switches the device into Active mode.

12.7.7 Power Mode Switching Protection

The Power Management Module has several mechanisms to protect the device from malfunctions caused by missing or unstable clock signals.

The PMMSR.OHC, PMMSR.OMC, and PMMSR.OLC bits indicate the current status of the PLL, high-frequency oscillator, and low-frequency oscillator, respectively. Software can check the appropriate bit before switching to a power mode that requires the clock. A set status bit indicates an operating, stable clock. A clear status bit indicates a clock that is disabled, not available, or not yet stable. (Except in the case of the PLL, which has a set status bit when disabled.)

During a power mode transition, if there is a request to switch to a mode with a clear status bit, the switch is delayed until that bit is set by the hardware.

When the system is built without an external crystal network for the low-frequency clock, Main Clock is divided by a prescaler factor to produce the low-frequency clock. In this situation, Main Clock is disabled only in the Idle and Halt modes, and cannot be disabled for the Power Save mode.

Without an external crystal network for the low-frequency clock, the device comes out of Halt or Idle mode and enters Active mode with Main Clock driving Slow Clock.

Note: For correct operation in the absence of a low-frequency crystal, X2CKI must be tied low (not left floating) so that the hardware can detect the absence of the crystal.

13.0 Multi-Input Wake-Up

The Multi-Input Wake-Up Unit (MIWU) monitors its 16 input channels for a software-selectable trigger condition. On detection of a trigger condition, the module generates an interrupt request and if enabled, a wake-up request. A wake-up request can be used by the power management unit to exit the Halt, Idle, or Power Save mode and return to the active mode. An interrupt request generates an interrupt to the CPU (interrupt IRQ2–IRQ5), which allows an interrupt handler to respond to MIWU events.

The wake-up event only activates the clocks and CPU, but does not by itself initiate execution of any code. It is the interrupt request associated with the MIWU that gets the CPU to start executing code, by jumping to the corresponding interrupt handler. Therefore, setting up the MIWU interrupt handler is essential for any wake-up operation.

There are four interrupt requests that can be routed to the ICU as shown in Figure 10. Each of the 16 MIWU channels can be programmed to activate one of these four interrupt requests.

The MIWU channels are named WUI0 through WUI15, as shown in Table 28.

Table 28 MIWU Sources

MIWU Channel	Source
WUI0	TWM-T0OUT
WUI1	ACCESS.bus
WUI2	CANRX
WUI3	$\overline{\text{MWCS}}$
WUI4	$\overline{\text{CTS}}$
WUI5	RXD
WUI6	Bluetooth LLC
WUI7	AAI SFS
WUI8	Reserved
WUI9	PI6
WUI10	PG0
WUI11	PG1
WUI12	PG2
WUI13	PG3
WUI14	PG6
WUI15	PG7

Each channel can be configured to trigger on rising or falling edges, as determined by the setting in the WKEDG register. Each trigger event is latched into the WKPND register. If a trigger event is enabled by its respective bit in the WKENA register, an active wake-up/interrupt signal is generated. Software can determine which channel has generated the active signal by reading the WKPND register.

The MIWU is active at all times, including the Halt mode. All device clocks are stopped in this mode. Therefore, detecting an external trigger condition and the subsequent setting of the pending bit are not synchronous to the System Clock.

13.1 MULTI-INPUT WAKE-UP REGISTERS

Table 29 lists the MIWU unit registers.

Table 29 Multi-Input Wake-Up Registers

Name	Address	Description
WKEDG	FF FC80h	Wake-Up Edge Detection Register
WKENA	FF FC82h	Wake-Up Enable Register
WKIENA	FF FC8Ch	Wake-Up Interrupt Enable Register
WKICTL1	FF FC84h	Wake-Up Interrupt Control Register 1
WKICTL2	FF FC86h	Wake-Up Interrupt Control Register 2
WKPND	FF FC88h	Wake-Up Pending Register
WKPCL	FF FC8Ah	Wake-Up Pending Clear Register

13.1.1 Wake-Up Edge Detection Register (WKEDG)

The WKEDG register is a word-wide read/write register that controls the edge sensitivity of the MIWU channels. The WKEDG register is cleared upon reset, which configures all channels to be triggered on rising edges. The register format is shown below.

15	0
WKED	

WKED — The Wake-Up Edge Detection bits control the edge sensitivity for MIWU channels. The WKED15:0 bits correspond to the WUI[15:0] channels, respectively.
- 0 – Triggered on rising edge (low-to-high transition).
- 1 – Triggered on falling edge (high-to-low transition).

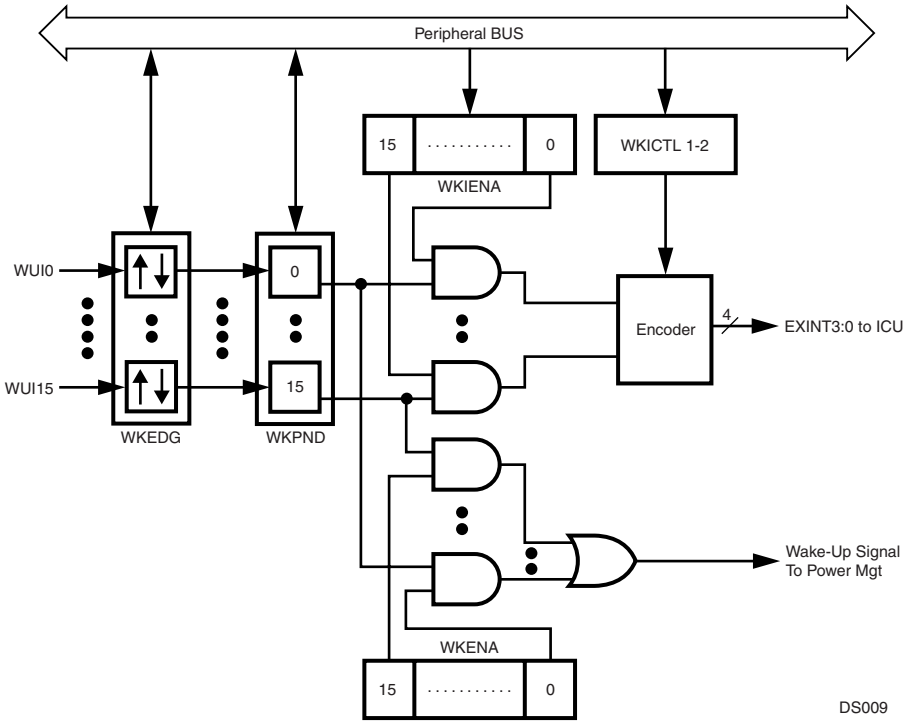

Figure 10. Multi-Input Wake-Up Module Block Diagram

13.1.2 Wake-Up Enable Register (WKENA)

The Wake-Up Enable (WKENA) register is a word-wide read/write register that individually enables or disables wake-up events from the MIWU channels. The WKENA register is cleared upon reset, which disables all wake-up/interrupt channels. The register format is shown below.

15	0
WKEN	

WKEN — The Wake-Up Enable bits enable and disable the MIWU channels. The WKEN15:0 bits correspond to the WUI15:0 channels, respectively.
0 – MIWU channel wake-up events disabled.
1 – MIWU channel wake-up events enabled.

13.1.3 Wake-Up Interrupt Enable Register (WKIENA)

The WKIENA register is a word-wide read/write register that enables and disables interrupts from the MIWU channels. The register format is shown below.

15	0
WKIEN	

WKIEN — The Wake-Up Interrupt Enable bits control whether MIWU channels generate interrupts.
0 – Interrupt disabled.
1 – Interrupt enabled.

13.1.4 Wake-Up Interrupt Control Register 1 (WKICTL1)

The WKICTL1 register is a word-wide read/write register that selects the interrupt request signal for the associated MIWU channels WUI7:0. At reset, the WKICTL1 register is cleared, which selects MIWU Interrupt Request 0 for all eight channels. The register format is shown below.

15	14	13	12	11	10	9	8	7	6	5	4	3	2	1	0
WKIN	TR7	WKIN	TR6	WKIN	TR5	WKIN	TR4	WKIN	TR3	WKIN	TR2	WKIN	TR1	WKIN	TR0

WKINTR — The Wake-Up Interrupt Request Select fields select which of the four MIWU interrupt requests are activated for the corresponding channel.
00 – Selects MIWU interrupt request 0.
01 – Selects MIWU interrupt request 1.
10 – Selects MIWU interrupt request 2.
11 – Selects MIWU interrupt request 3.

13.1.5 Wake-Up Interrupt Control Register 2 (WKICTL2)

The WKICTL2 register is a word-wide read/write register that selects the interrupt request signal for the associated MIWU channels WUI15 to WUI8. At reset, the WKICTL2 register is cleared, which selects MIWU Interrupt Request 0 for all eight channels. The register format is shown below.

15	14	13	12	11	10	9	8	7	6	5	4	3	2	1	0
WKIN TR15		WKIN TR14		WKIN TR13		WKIN TR12		WKIN TR11		WKIN TR10		WKIN TR9		WKIN TR8	

WKINTR The Wake-Up Interrupt Request Select fields select which of the four MIWU interrupt requests are activated for the corresponding channel.
00 – Selects MIWU interrupt request 0.
01 – Selects MIWU interrupt request 1.
10 – Selects MIWU interrupt request 2.
11 – Selects MIWU interrupt request 3.

13.1.6 Wake-Up Pending Register (WKPND)

The WKPND register is a word-wide read/write register in which the Multi-Input Wake-Up module latches any detected trigger conditions. The CPU can only write a 1 to any bit position in this register. If the CPU attempts to write a 0, it has no effect on that bit. To clear a bit in this register, the CPU must use the WKPCL register. This implementation prevents a potential hardware-software conflict during a read-modify-write operation on the WKPND register.

This register is cleared upon reset. The register format is shown below.

15	0
WKPD	

WKPD The Wake-Up Pending bits indicate which MIWU channels have been triggered. The WKPD[15:0] bits correspond to the WUI[15:0] channels. Writing 1 to a bit sets it.
0 – Trigger condition did not occur.
1 – Trigger condition occurred.

13.1.7 Wake-Up Pending Clear Register (WKPCL)

The Wake-Up Pending Clear (WKPCL) register is a word-wide write-only register that lets the CPU clear bits in the WKPND register. Writing a 1 to a bit position in the WKPCL register clears the corresponding bit in the WKPND register. Writing a 0 has no effect. Do not modify this register with instructions that access the register as a read-modify-write operand, such as the bit manipulation instructions.

Reading this register location returns undefined data. Therefore, do not use a read-modify-write sequence (such as the SBIT instruction) to set individual bits. Do not attempt to read the register, then perform a logical OR on the register value. Instead, write the mask directly to the register address. The register format is shown below.

15	0
WKCL	

WKCL Writing 1 to a bit clears it.
0 – Writing 0 has no effect.
1 – Writing 1 clears the corresponding bit in the WKPD register.

13.2 PROGRAMMING PROCEDURES

To set up and use the Multi-Input Wake-Up function, use the following procedure. Performing the steps in the order shown will prevent false triggering of a wake-up condition. This same procedure should be used following a reset because the wake-up inputs are left floating, resulting in unknown data on the input pins.

1. Clear the WKENA register to disable the MIWU channels.
2. Write the WKEDG register to select the desired type of edge sensitivity (clear for rising edge, set for falling edge).
3. Set all bits in the WKPCL register to clear any pending bits in the WKPND register.
4. Set up the WKICTL1 and WKICTL2 registers to define the interrupt request signal used for each channel.
5. Set the bits in the WKENA register corresponding to the wake-up channels to be activated.

To change the edge sensitivity of a wake-up channel, use the following procedure. Performing the steps in the order shown will prevent false triggering of a wake-up/interrupt condition.

1. Clear the WKENA bit associated with the input to be reprogrammed.
2. Write the new value to the corresponding bit position in the WKEDG register to reprogram the edge sensitivity of the input.
3. Set the corresponding bit in the WKPCL register to clear the pending bit in the WKPND register.
4. Set the same WKENA bit to re-enable the wake-up function.

14.0 Input/Output Ports

Each device has up to 40 software-configurable I/O pins, organized into five 8-bit ports. The ports are named Port B, Port C, Port G, Port H, and Port I.

In addition to their general-purpose I/O capability, the I/O pins of Ports G, H, and I have alternate functions for use with on-chip peripheral modules such as the UART or the Multi-Input Wake-Up module. The alternate functions of all I/O pins are shown in Table 2.

Ports B and C are used as the 16-bit data bus when an external bus is enabled (100-pin devices only). This alternate function is selected by enabling the DEV or ERE operating environments, not by programming the port registers.

The I/O pin characteristics are fully programmable. Each pin can be configured to operate as a TRI-STATE output, push-pull output, weak pull-up input, or high-impedance input. Different pins within the same port can be individually configured to operate in different modes.

Figure 11 is a diagram showing the I/O port pin logic. The register bits, multiplexers, and buffers allow the port pin to be configured into the various operating modes.The output buffer is a TRI-STATE buffer with weak pull-up capability. The weak pull-up, if used, prevents the port pin from going to an undefined state when it operates as an input.

To reduce power consumption, input buffers configured for general-purpose I/O are only enabled when they are read. When configured for an alternate function, the input buffers are enabled continuously. To minimize power consumption, input signals to enabled buffers must be held within 0.2 volts of the VCC or GND voltage.

The electrical characteristics and drive capabilities of the input and output buffers are described in Section 27.0.

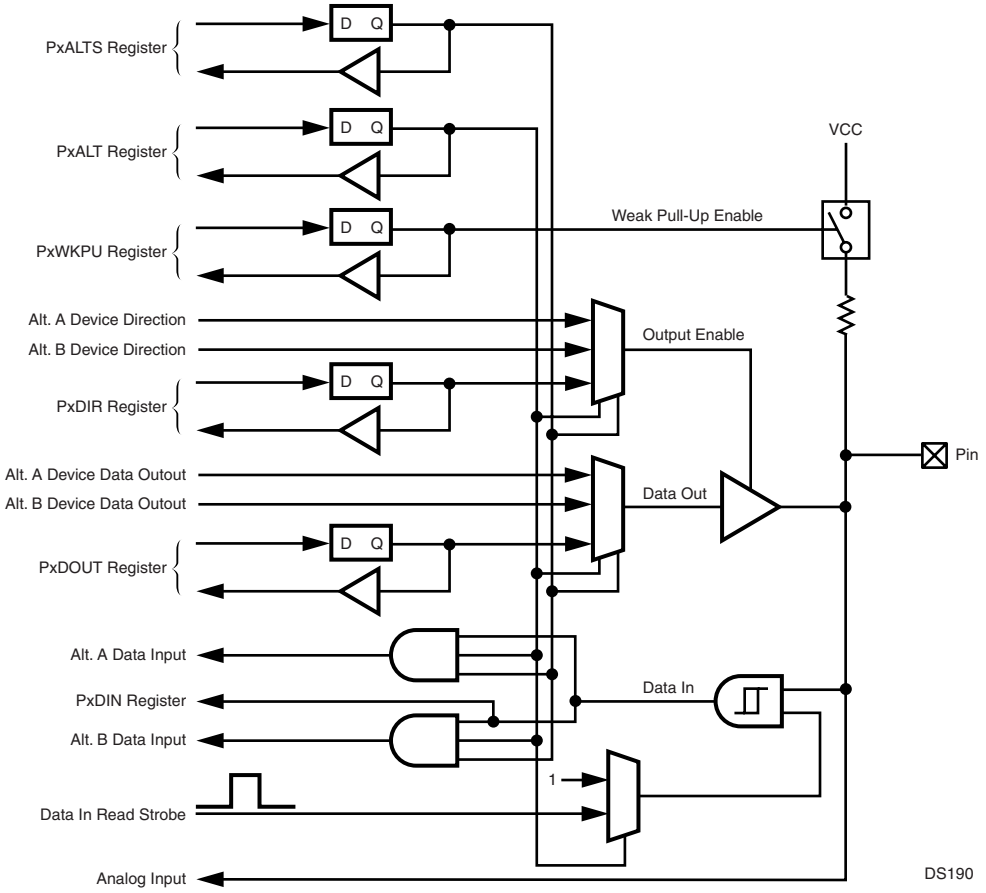

Figure 11. I/O Port Pin Logic

14.1 PORT REGISTERS

Each port has an associated set of memory-mapped registers used for controlling the port and for holding the port data:

- PxALT: Port alternate function register
- PxALTS: Port alternate function select register
- PxDIR: Port direction register
- PxDIN: Port data input register
- PxDOUT: Port data output register
- PxWPU: Port weak pull-up register
- PxHDRV: Port high drive strength register

Table 30 Port Registers

Name	Address	Description
PBALT	FF FB00h	Port B Alternate Function Register
PBDIR	FF FB02h	Port B Direction Register
PBDIN	FF FB04h	Port B Data Input Register
PBDOUT	FF FB06h	Port B Data Output Register
PBWPU	FF FB08h	Port B Weak Pull-Up Register
PBHDRV	FF FB0Ah	Port B High Drive Strength Register
PBALTS	FF FB0Ch	Port B Alternate Function Select Register
PCALT	FF FB10h	Port C Alternate Function Register
PCDIR	FF FB12h	Port C Direction Register
PCDIN	FF FB14h	Port C Data Input Register
PCDOUT	FF FB16h	Port C Data Output Register
PCWPU	FF FB18h	Port C Weak Pull-Up Register
PCHDRV	FF FB1Ah	Port C High Drive Strength Register
PCALTS	FF FB1Ch	Port C Alternate Function Select Register
PGALT	FF FCA0h	Port G Alternate Function Register
PGDIR	FF FCA2h	Port G Direction Register
PGDIN	FF FCA4h	Port G Data Input Register
PGDOUT	FF FCA6h	Port G Data Output Register
PGWPU	FF FCA8h	Port G Weak Pull-Up Register
PGHDRV	FF FCAAh	Port G High Drive Strength Register
PGALTS	FF FCACh	Port G Alternate Function Select Register

Table 30 Port Registers

Name	Address	Description
PHALT	FF FCC0h	Port H Alternate Function Register
PHDIR	FF FCC2h	Port H Direction Register
PHDIN	FF FCC4h	Port H Data Input Register
PHDOUT	FF FCC6h	Port H Data Output Register
PHWPU	FF FCC8h	Port H Weak Pull-Up Register
PHHDRV	FF FCCAh	Port H High Drive Strength Register
PHALTS	FF FCCCh	Port H Alternate Function Select Register
PIALT	FF FEE0h	Port I Alternate Function Register
PIDIR	FF FEE2h	Port I Direction Register
PIDIN	FF FEE4h	Port I Data Input Register
PIDOUT	FF FEE6h	Port I Data Output Register
PIWPU	FF FEE8h	Port I Weak Pull-Up Register
PIHDRV	FF FEEAh	Port I High Drive Strength Register
PIALTS	FF FEECh	Port I Alternate Function Select Register

In the descriptions of the ports and port registers, the lowercase letter “x” represents the port designation, either B, C, G, H, or I. For example, “PxDIR register” means any one of the port direction registers: PBDIR, PCDIR, PGDIR, PHDIR, or PIDIR.

All of the port registers are byte-wide read/write registers, except for the port data input registers, which are read-only registers. Each register bit controls the function of the corresponding port pin. For example, PGDIR.2 (bit 2 of the PGDIR register) controls the direction of port pin PG2.

14.1.1 Port Alternate Function Register (PxALT)

The PxALT registers control whether the port pins are used for general-purpose I/O or for their alternate function. Each port pin can be controlled independently.

A clear bit in the alternate function register causes the corresponding pin to be used for general-purpose I/O. In this configuration, the output buffer is controlled by the direction register (PxDIR) and the data output register (PxDOUT). The input buffer is visible to software as the data input register (PxDIN).

A set bit in the alternate function register (PxALT) causes the corresponding pin to be used for its peripheral I/O function. When the alternate function is selected, the output buffer data and TRI-STATE configuration are controlled by signals from the on-chip peripheral device.

A reset operation clears the port alternate function registers, which initializes the pins as general-purpose I/O ports. This register must be enabled before the corresponding alternate function is enabled.

7							0
PxALT							

PxALT — The PxALT bits control whether the corresponding port pins are general-purpose I/O ports or are used for their alternate function by an on-chip peripheral.
0 — General-purpose I/O selected.
1 — Alternate function selected.

14.1.2 Port Direction Register (PxDIR)

The port direction register (PxDIR) determines whether each port pin is used for input or for output. A clear bit in this register causes the corresponding pin to operate as an input, which puts the output buffer in the high-impedance state. A set bit causes the pin to operate as an output, which enables the output buffer.

A reset operation clears the port direction registers, which initializes the pins as inputs.

7							0
PxDIR							

PxDIR — The PxDIR bits select the direction of the corresponding port pin.
0 — Input.
1 — Output.

14.1.3 Port Data Input Register (PxDIN)

The data input register (PxDIN) is a read-only register that returns the current state on each port pin. The CPU can read this register at any time even when the pin is configured as an output.

7							0
PxDIN							

PxDIN — The PxDIN bits indicate the state on the corresponding port pin.
0 — Pin is low.
1 — Pin is high.

14.1.4 Port Data Output Register (PxDOUT)

The data output register (PxDOUT) holds the data to be driven on output port pins. In this configuration, writing to the register changes the output value. Reading the register returns the last value written to the register.

A reset operation leaves the register contents unchanged. At power-up, the PxDOUT registers contain unknown values.

7							0
PxDOUT							

PxDOUT — The PxDOUT bits hold the data to be driven on pins configured as outputs in general-purpose I/O mode.
0 — Drive the pin low.
1 — Drive the pin high.

14.1.5 Port Weak Pull-Up Register (PxWPU)

The weak pull-up register (PxWPU) determines whether the port pins have a weak pull-up on the output buffer. The pull-up device, if enabled by the register bit, operates in the general-purpose I/O mode whenever the port output buffer is disabled. In the alternate function mode, the pull-ups are always disabled.

A reset operation clears the port weak pull-up registers, which disables all pull-ups.

7							0
PxWPU							

PxWPU — The PxWPU bits control whether the weak pull-up is enabled.
0 — Weak pull-up disabled.
1 — Weak pull-up enabled.

14.1.6 Port High Drive Strength Register (PxHDRV)

The PxHDRV register is a byte-wide, read/write register that controls the slew rate of the corresponding pins. The high drive strength function is enabled when the corresponding bits of the PxHDRV register are set. In both GPIO and alternate function modes, the drive strength function is enabled by the PxHDRV registers. At reset, the PxHDRV registers are cleared, making the ports low speed.

7							0
PxHDRV							

PxHDRV — The PxHDRV bits control whether output pins are driven with slow or fast slew rate.
0 – Slow slew rate.
1 – Fast slew rate.

14.1.7 Port Alternate Function Select Register (PxALTS)

The PxALTS register selects which of two alternate functions are selected for the port pin. These bits are ignored unless the corresponding PxALT bits are set. Each port pin can be controlled independently.

7							0
PxALTS							

PxALTS — The PxALTS bits select among two alternate functions. Table 31 shows the mapping of the PxALTS bits to the alternate functions. Unused PxALTS bits must be clear.

Table 31 Alternate Function Select

Port Pin	PxALTS = 0	PxALTS = 1
PG0	RXD	WUI10
PG1	TXD	WUI11
PG2	$\overline{\text{RTS}}$	WUI12
PG3	$\overline{\text{CTS}}$	WUI13
PG4	CKX	TB
PG5	SRFS	$\overline{\text{NMI}}$
PG6	CANRX	WUI14
PG7	CANTX	WUI15
PH0	MSK	TIO1
PH1	MDIDO	TIO2
PH2	MDODI	TIO3
PH3	$\overline{\text{MWCS}}$	TIO4
PH4	SCK	TIO5
PH5	SFS	TIO6
PH6	STD	TIO7
PH7	SRD	TIO8
PI0	RFSYNC	Reserved
PI1	RFCE	Reserved
PI2	BTSEQ1	SRCLK
PI3	SCLK	Reserved
PI4	SDAT	Reserved
PI5	$\overline{\text{SLE}}$	Reserved
PI6	WUI9	BTSEQ6
PI7	TA	BTSEQ7

14.2 OPEN-DRAIN OPERATION

A port pin can be configured to operate as an inverting open-drain output buffer. To do this, the CPU must clear the bit in the data output register (PxDOUT) and then use the port direction register (PxDIR) to set the value of the port pin. With the direction register bit set (direction = out), the value zero is forced on the pin. With the direction register bit clear (direction = in), the pin is placed in the TRI-STATE mode. If desired, the internal weak pull-up can be enabled to pull the signal high when the output buffer is in TRI-STATE mode.

15.0 Bluetooth Controller

The integrated hardware Bluetooth Lower Link Controller (LLC) complies to the Bluetooth Specification Version 1.1 and integrates the following functions:

- 4.5K-byte dedicated Bluetooth data RAM
- 1K-byte dedicated Bluetooth Sequencer RAM
- Support of all Bluetooth 1.1 packet types
- Support for fast frequency hopping of 1600 hops/s
- Access code correlation and slot timing recovery circuit
- Power Management Control Logic
- BlueRF-compatible interface to connect with National's LMX5252 and other RF transceiver chips

For a detailed description of the interface to the LMX5252, consult the LMX5252 data sheet which is available from the National Semiconductor wireless group. National provides software libraries for using the Bluetooth LLC. Documentation for the software libraries is also available from National Semiconductor.

15.1 RF INTERFACE

The CP3BT13 interfaces to the LMX5251 or LMX5252 radio chips though the RF interface.

Figure 12 shows the interface between the CP3BT13 and the LMX5251 radio chip.

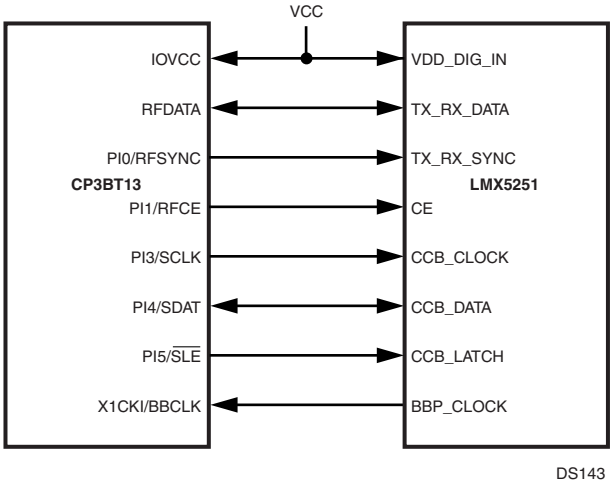

Figure 12. LMX5251 Interface

Figure 13 shows the interface between the CP3BT13 and the LMX5252 radio chip.

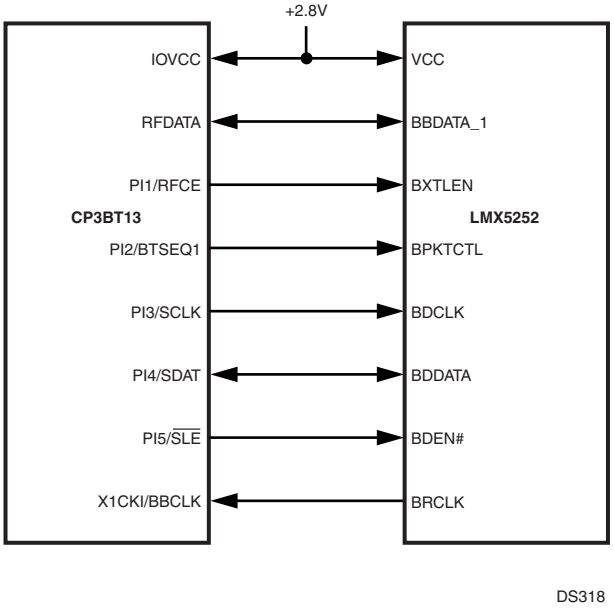

Figure 13. LMX5252 Interface

The CP3BT13 implements a BlueRF-compatible interface, which may be used with other RF transceiver chips.

15.1.1 RF Interface Signals

The RF interface signals are grouped as follows:

- Modem Signals (BBCLK, RFDATA, and RFSYNC)
- Control Signal (RFCE)
- Serial Interface Signals (SCLK, SDAT, and $\overline{\text{SLE}}$)
- Bluetooth Sequencer Status Signals (BTSEQ1, BTSEQ2, and BTSEQ2)

X1CKI/BBCLK

The X1CKI/BBCLK pin is the input signal for the 12-MHz clock signal. The radio chip uses this signal internally as the 12× oversampling clock and provides it externally to the CP3BT13 for use as the Main Clock.

RFDATA

The RFDATA signal is the multiplexed Bluetooth data receive and transmit signal. The data is provided at a bit rate of 1Mbit/s with 12× oversampling, synchronized to the 12 MHz BBCLK. The RFDATA signal is a dedicated RF interface pin. This signal is driven to a logic high level after reset.

RFSYNC

In receive mode (data direction from the radio chip to the CP3BT13), the RFSYNC signal acts as the frequency correction/DC compensation circuit control output to the radio chip. The RFSYNC signal is driven low throughout the correlation phase and driven high when synchronization to the received access code is achieved.

In transmit mode (data direction from the CP3BT13 to the radio chip), the RFSYNC signal enables the RF output of the radio chip. When the RFSYNC pin is driven high, the RF

transmitter circuit of the radio chip is enabled, corresponding to the settings of the power control register in the radio chip.

The RFSYNC signal is the alternate function of the general-purpose I/O pin PI0. At reset, this pin is in TRI-STATE mode. Software must enable the alternate function of the PI0 pin to give control over this signal to the RF interface.

RFCE

The RFCE signal is the chip enable output to the external RF chip. When the RFCE signal is driven high, the RF chip power is controlled by the settings of its power control registers. When the RFCE signal is driven low, the RF chip is powered-down. However, the serial interface is still operational and the CP3BT13 can still access the RF chip internal control registers.

The RFCE signal is the alternate function of the general-purpose I/O pin PI1. At reset, this pin is in TRI-STATE mode. Software must enable the alternate function of the PI1 pin to give control over this signal to the RF interface.

During Bluetooth power-down phases, the CP3BT13 provides a mechanism to reduce the power consumption of an external RF chip by driving the RFCE signal of the RF interface to a logic low level. This feature is available when the Power Management Module of the CP3BT13 has enabled the Hardware Clock Control mechanism.

SCLK

The SCLK signal is the serial interface shift clock output. The CP3BT13 always acts as the master of the serial interface and therefore always provides the shift clock. The SCLK signal is the alternate function of the general-purpose I/O pin PI3. At reset, this pin is in TRI-STATE mode. Software must enable the alternate function of the PI3 pin to give control over this signal to the RF interface.

SDAT

The SDAT signal is the multiplexed serial data receive and transmit path between the radio chip and the CP3BT13.

The SDAT signal is the alternate function of the general-purpose I/O pin PI4. At reset, this pin is in TRI-STATE mode. Software must enable the alternate function of the PI4 pin to give control over this signal to the RF interface.

$\overline{\text{SLE}}$

The $\overline{\text{SLE}}$ pin is the serial load enable output of the serial interface of the CP3BT13.

During write operations (to the radio chip registers), the data received by the shift register of the radio chip is copied into the address register on the next rising edge of SCLK after the $\overline{\text{SLE}}$ signal goes high.

During read operations (read from the registers), the radio chip releases the SDAT line on the next rising edge of SCLK after the $\overline{\text{SLE}}$ signal goes high.

$\overline{\text{SLE}}$ is the alternate function of the general-purpose I/O pin PI5. At reset, this pin is in TRI-STATE mode. Software must enable the alternate function of the PI5 pin to give control over this signal to the RF interface.

BTSEQ[3:1]

The BTSEQ[3:1] signals indicate internal states of the Bluetooth sequencer, which are used for interfacing to some external devices.

15.2 SERIAL INTERFACE

The radio chip register set can be accessed by the CP3BT13 through the serial interface. The serial interface uses three pins of the RF interface: SDAT, SCLK, and $\overline{\text{SLE}}$.

The serial interface of the CP3BT13 always operates as the master, providing the shift clock (SCLK) and load enable ($\overline{\text{SLE}}$) signal to the LMX5252. The LMX5252 always acts as the slave.

A 25-bit shift protocol is used to perform read/write accesses to the radio chip internal registers. The complete protocol is comprised of the following sections:

- 3-bit Header Field
- Read/Write Bit
- 5-bit Address Field
- 16-bit Data Field

Header

The 3-bit header contains the fixed data 101b (except for Fast Write Operations).

Read/Write Bit

The header is followed by the read/write control bit (R/W). If the Read/Write bit is clear, a write operation is performed and the 16-bit data portion is copied into the addressed radio chip register.

Address

The address field is used to select one of the radio chip internal registers.

Data

The data field is used to transfer data to or from a radio chip register. The timing is modified for reads, to transfer control over the data signal from the CP3BT13 to the radio chip.

Figure 14 shows the serial interface protocol format.

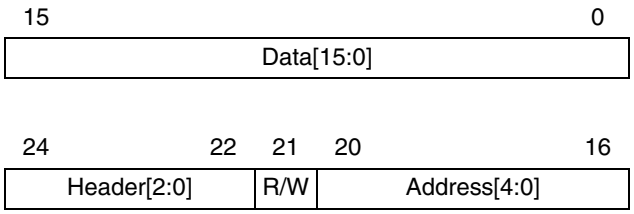

Figure 14. Serial Interface Protocol Format

Data is transferred on the serial interface with the most significant bit (MSB) first.

Write Operation

When the R/W bit is clear, the 16 bits of the data field are shifted out of the CP3BT13 on the falling edge of SCLK. Data is sampled by the radio chip on the rising edge of SCLK. When $\overline{SLE}$ is high, the 16-bit data are copied into the radio chip register on the next rising edge of SCLK. The data is loaded in the appropriate radio chip register depending on the state of the four address bits, Address[4:0]. Figure 15 shows the timing for the write operation.

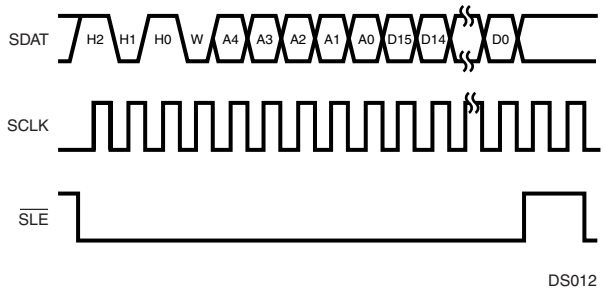

Figure 15. Serial Interface Write Timing

Read Operation

When the R/W bit is set, data is shifted out of the radio chip on the rising edge of SCLK. Data is sampled by the CP3BT13 on the falling edge of SCLK. On reception of the read command (R/W = 1), the radio chip takes control of the serial interface data line. The received 16-bit data is loaded by the CP3BT13 after the first falling edge of SCLK when $\overline{SLE}$ is high. When $\overline{SLE}$ is high, the radio chip releases the SDAT line again on the next rising edge of SCLK. The CP3BT13 takes control of the SDAT line again after the following rising edge of SCLK. Which radio chip register is read, depends on the state of the four address bits, Address[4:0]. The transfer is always 16 bits, without regard to the actual size of the register. Unimplemented bits contain undefined data. Figure 16 shows the timing for the read operation.

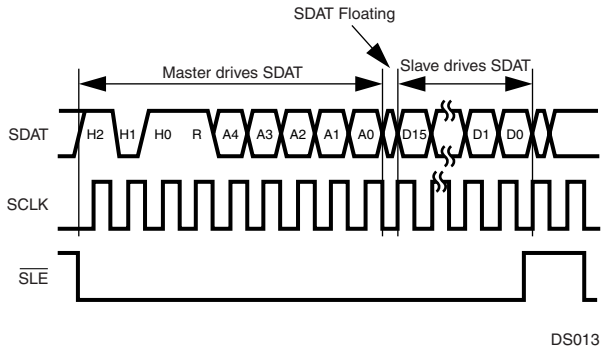

Figure 16. Serial Interface Read Timing

Fast-Write Operation

An enhanced serial interface mode including fast write capability is enabled when the FW bit in the radio chip is set. This bit activates a mode with decreased addressing and control overhead, which allows fast loading of time-critical registers during normal operation. When the FW bit is set, the 3-bit header may have a value other than 101b, and it is used to address the write-only registers of the radio chip. Fast writes load the same physical register as the corresponding normal write operation.

For the power control and CMOS output registers of the RF chip, it is only necessary to transmit a total of 8 bits (3 address bits and 5 data bits), because the remaining eight bits are unused.

While the FW bit is set, normal Read/Write operations are still valid and may be used to access non-time-critical control registers. Figure 17 shows the timing for a 16-bit Fast-Write transaction, and Figure 18 shows the timing for an 8-bit Fast-Write transaction.

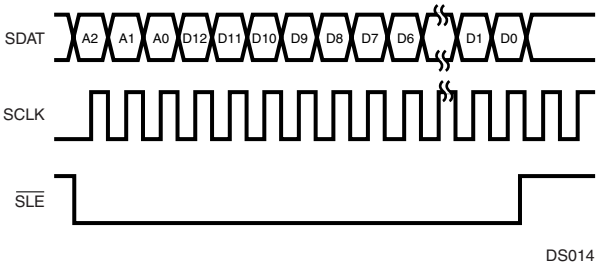

Figure 17. Serial Interface 16-bit Fast-Write Timing

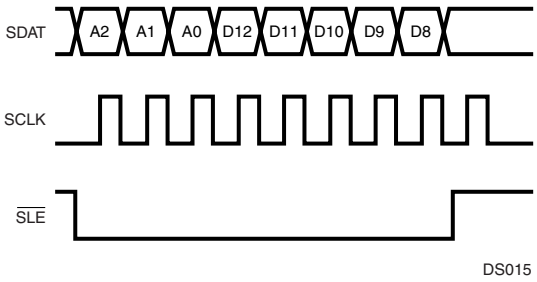

Figure 18. Serial Interface 8-bit Fast-Write Timing

32-Bit Write Operation

On the LMX5252, a 32-bit register is loaded by writing to the same register address twice. The first write loads the high word (bits 31:16), and the second write loads the low word (bits 15:0). The two writes must be separated by at least two clock cycles. For a 4-MHz clock, the minimum separation time is 500 ns.

The value read from a 32-bit register is a counter value, not the contents of the register. The counter value indicates which words have been written. If the high word has been written, the counter reads as 0000h. If both words have been written, the counter reads as 0001h. The value returned by reading a 32-bit register is independent of the contents of the register.

Figure 19 and Figure 20 show the timing for 32-bit register writing and reading.

The order for accessing the registers is from high to low: 17, 15, 14, 12, 11, 10, 9, 8, 7, 6, 5, 4, 2, and 1. These registers must be written during the initialization of the LMX5252.

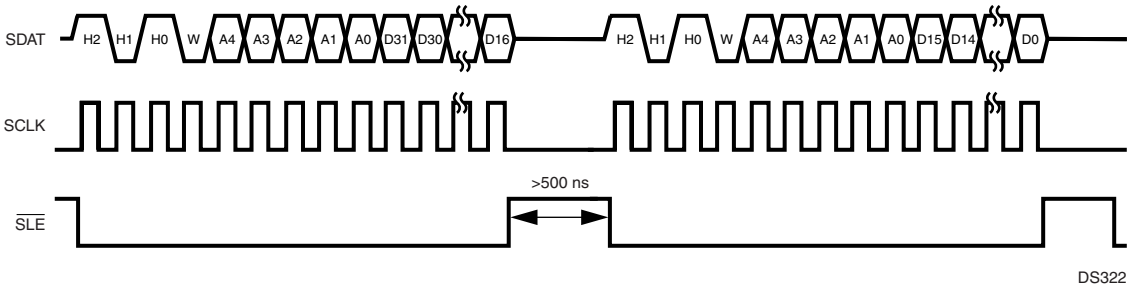

Figure 19. 32-Bit Write Timing

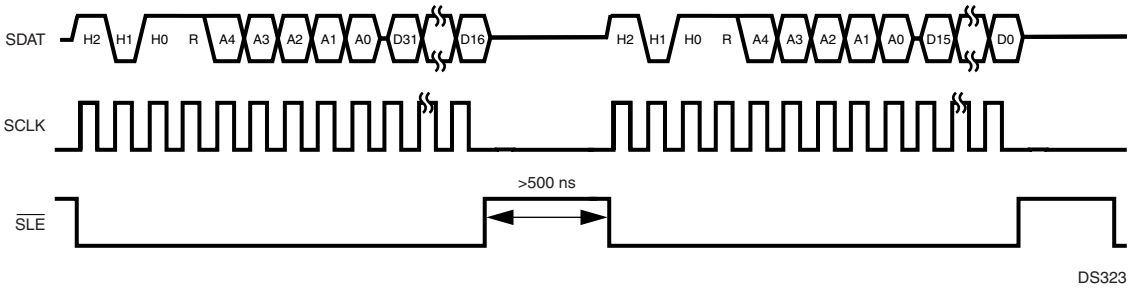

Figure 20. 32-Bit Read Timing

An example of a 32-bit write is shown in Table 32. In this example, the 32-bit value FFFF DC04h is written to register address 0Ah. In cycle 1, the high word (FFFFh) is written. In the first part of cycle 2, the CP3BT13 drives the header, R/W bit, and register address for a read cycle. In the second part of cycle 2, the LMX5252 drives the counter value. The counter value is 0, which indicates one word has been written. In cycle 3, the low word (DC04h) is written. In the first part of cycle 4, the CP3BT13 drives the header, R/W bit, and register address for a read cycle. In the second part of cycle 4, the LMX5252 drives the counter value. The counter value is 1, which indicates two words have been written.

Table 32 Example of 32-Bit Write with Interleaved Reads

Cycle	Serial Data on SDAT	Description
1	101 0 01010 1111111111111111	Write cycle driven by CP3BT13. Data is FFFFh. Address is 0Ah.
2	101 1 01010	First part of read cycle driven by CP3BT13. Address is 0Ah.
	0000000000000000	Second part of read cycle driven by LMX5252. Counter value is 0.
3	101 0 01010 1101110000000100	Write cycle driven by CP3BT13. Data is DC04h. Address is 0Ah.
4	101 1 01010	First part of read cycle driven by CP3BT13. Address is 0Ah.
	0000000000000001	Second part of read cycle driven by LMX5252. Counter value is 1.

15.3 LMX5251 POWER-UP SEQUENCE

To power-up a Bluetooth system based on the CP3BT13 and LMX5251 devices, the following sequence must be performed:

1. Apply VDD to the LMX5251.
2. Apply IOVCC and VCC to the CP3BT13.
3. Drive the RESET# pin of the LMX5251 high a minimum of 2 ms after the LMX5251 and CP3000 supply rails are powered up. This resets the LMX5251 and CP3BT13.
4. After internal Power-On Reset (POR) of the CP3BT13, the RFDATA pin is driven high. The RFCE, RFSYNC, and SDAT pins are in TRI-STATE mode. Internal pull-up/pull-down resistors on the CCB_CLOCK (SCLK), CCB_DATA (SDAT), CCB_LATCH ($\overline{SLE}$), and TX_RX_SYNC (RFSYNC) inputs of the LMX5251 pull these signals to states required during the power-up sequence.
5. When the RFDATA pin is driven high, the LMX5251 enables its oscillator. After an oscillator start-up delay, the LMX5251 drives a stable 12-MHz BBP_CLOCK (BBCLK) to the CP3BT13.
6. The Bluetooth baseband processor on the CP3BT13 now directly controls the RF interface pins and drives the logic levels required during the power-up phase. When the RFCE pin is driven high, the LMX5251 switches from “power-up” to “normal” mode and disables the internal pull-up/pull-down resistors on its RF interface inputs.
7. In “normal” mode, the oscillator of the LMX5251 is controlled by the RFCE signal. Driving RFCE high enables the oscillator, and the LMX5251 drives its BBP_CLOCK (BBCLK) output.

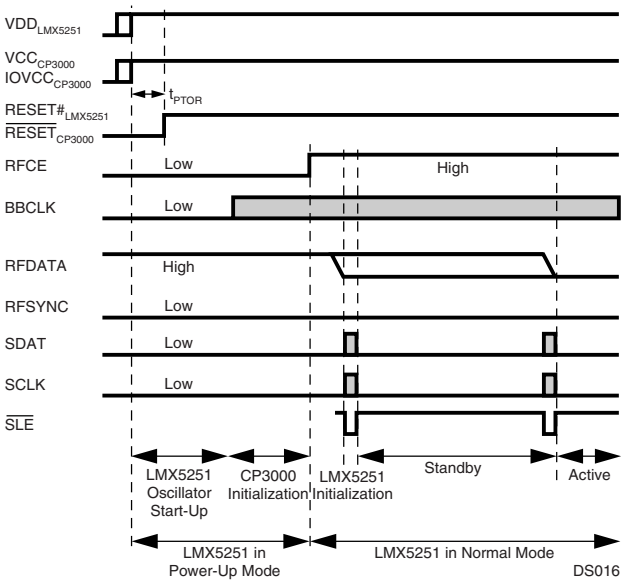

Figure 21. LMX5251 Power-Up Sequence

15.4 LMX5252 POWER-UP SEQUENCE

A Bluetooth system based on the CP3BT13 and LMX5252 devices has the following states:

- **Off**—When the LMX5252 enters Off mode, all configuration data is lost. In this state, the LMX5252 drives BPOR low.
- **Power-Up**—When the power supply is on and the LMX5252 RESET# input is high, the LMX5252 starts up its crystal oscillator and enters Power-Up mode. After the crystal oscillator is settled, the LMX5252 sends four clock cycles on BRCLK (BBCLK) before driving BPOR high.
- **RF Init**—The baseband controller on the CP3BT13 now drives RFCE high and takes control of the crystal oscillator. The baseband performs all the needed initialization (such as writing the registers in the LMX5252 and crystal oscillator trim).
- **Idle**—The baseband controller on the CP3BT13 drives RFDATA low when the initialization is ready. The LMX5252 is now ready to start transmitting, receiving, or enter Sleep mode.
- **Sleep**—The LMX5252 can be forced into Sleep mode at any time by driving RFCE low. All configuration settings are kept, only the Bluetooth low power clock is running (B3k2).
- **Wait XTL**—When RFCE goes high, the crystal oscillator becomes operational. When it is stable, the LMX5252 enters Idle mode and drives BRCLK (BBCLK).

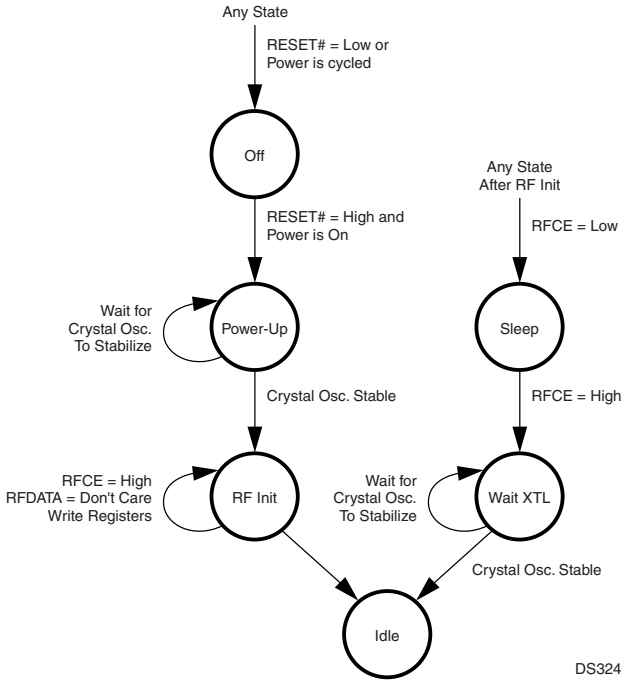

Figure 22. LMX5252 Power States

The power-up sequence for a Bluetooth system based on the CP3BT13 and LMX5252 devices is shown in Figure 23.

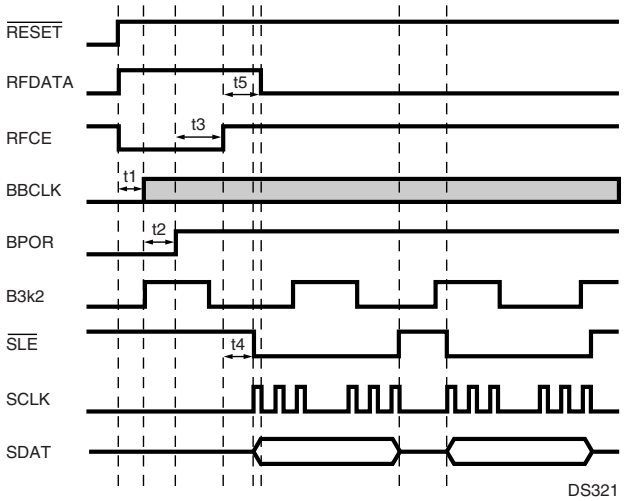

Figure 23. LMX5252 Power-Up Sequence

15.5 BLUETOOTH SLEEP MODE

The Bluetooth controller is capable of putting itself into a sleep mode for a specified number of Slow Clock cycles. In this mode, the controller clocks are stopped internally. The only circuitry which remains active are two counters (counter N and counter M) running at the Slow Clock rate. These counters determine the duration of the sleep mode.

The sequence of events when entering the LLC sleep mode is as follows:

1. The current Bluetooth counter contents are read by the CPU.
2. Software "estimates" the Bluetooth counter value after leaving the sleep mode.
3. The new Bluetooth counter value is written into the Bluetooth counter register.
4. The Bluetooth sequencer RAM is updated with the code required by the Bluetooth sequencer to enter/exit Sleep mode.
5. The Bluetooth sequencer RAM and the Bluetooth LLC registers are switched from the System Clock domain to the local 12 MHz Bluetooth clock domain. At this point, the Bluetooth sequencer RAM and Bluetooth LLC registers cannot be updated by the CPU, because the CPU no longer has access to the Bluetooth LLC.
6. Hardware Clock Control (HCC) is enabled, and the CP3BT13 enters a power-saving mode (Power Save or Idle mode). While in Power Save mode, the Slow Clock is used as the System Clock. While in Idle mode, the System Clock is turned off.
7. The Bluetooth sequencer checks if HCC is enabled. If HCC is enabled, the sequencer asserts HCC to the PMM. On the next rising edge of the low-frequency clock, the 1MHz clock and the 12 MHz clock are stopped locally within the Bluetooth LLC. At this point, the Bluetooth sequencer is stopped.
8. The M-counter starts counting. After M + 1 Slow Clock cycles, the HCC signal to the PMM is deasserted.
9. The PMM restarts the 12 MHz Main Clock (and the PLL, if required). The N-counter starts counting. After N + 1 Slow Clock cycles, the Bluetooth clocks (1 MHz and 12 MHz) are turned on again. The Bluetooth sequencer starts operating.
10. The Bluetooth sequencer waits for the completion of the sleep mode. When completed, the Bluetooth sequencer asserts a wake-up signal to the MIWU (see Section 13.0).
11. The PMM switches the System Clock to the high-frequency clock and the CP3BT13 enters Active mode again. HCC is disabled. The Bluetooth sequencer RAM and Bluetooth LLC registers are switched back from the local 12 MHz Bluetooth clock to the System Clock. At this point, the Bluetooth sequencer RAM and Bluetooth LLC registers are once again accessible by the CPU. If enabled, an interrupt is issued to the CPU.

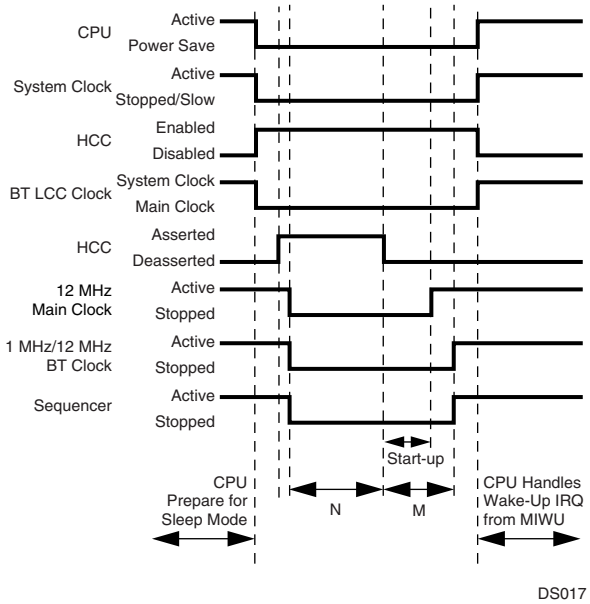

Figure 24. Bluetooth Sleep Mode Sequence

15.6 BLUETOOTH GLOBAL REGISTERS

Table 33 shows the memory map of the Bluetooth LLC global registers.

Table 33 Memory Map of Bluetooth Global Registers

Address (offset from 0E F180h)	Description
0000h–0048h	Global LLC Configuration
0049h–007Fh	Unused

15.7 BLUETOOTH SEQUENCER RAM

The sequencer RAM is a 1K memory-mapped section of RAM that contains the sequencer program. This RAM can be read and written by the CPU in the same way as the Static RAM space and can also be read by the sequencer in the Bluetooth LLC. Arbitration between these devices is performed in hardware.

15.8 BLUETOOTH SHARED DATA RAM

The shared data RAM is a 4.5K memory-mapped section of RAM that contains the link control data, RF programming look-up table, and the link payload. This RAM can be read and written in the same way as the Static RAM space and can also be read by the sequencer in the Bluetooth LLC. Arbitration between these devices is performed in hardware. Table 34 shows the memory map of the Bluetooth LLC shared Data RAM.

Table 34 Memory Map of Bluetooth Shared RAM

Address	Description
0000h–01D9h	RF Programming Look-up Table
01DAh–01FFh	Unused
0200h–023Fh	Link Control 0
0240h–027Fh	Link Control 1
0280h–02BFh	Link Control 2
02C0h–02FFh	Link Control 3
0300h–033Fh	Link Control 4
0340h–037Fh	Link Control 5
0380h–03BFh	Link Control 6
03C0h–03FFh	Link Control 7
0400h–11FFh	Link Payload 0–6

16.0 CAN Module

The CAN module contains a Full CAN class, CAN (Controller Area Network) serial bus interface for low/high speed applications. It supports reception and transmission of extended frames with a 29-bit identifier, standard frames with an 11-bit identifier, applications that require high speed (up to 1 Mbit/s), and a low-speed CAN interface with CAN master capability. Data transfer between the CAN bus and the CPU is handled by 15 message buffers, which can be individually configured as receive or transmit buffers. Every message buffer includes a status/control register which provides information about its current status and capabilities to configure the buffer. All message buffers are able to generate an interrupt on the reception of a valid frame or the successful transmission of a frame. In addition, an interrupt can be generated on bus errors.

An incoming message is only accepted if the message identifier passes one of two acceptance filtering masks. The filtering mask can be configured to receive a single message ID for each buffer or a group of IDs for each receive buffer. One of the buffers uses a separate message filtering procedure. This provides the capability to establish a BASIC-CAN path. Remote transmission requests can be processed automatically by automatic reconfiguration to a receiver after transmission or by automated transmit scheduling upon reception. A priority decoder allows any buffer to have one of 16 transmit priorities including the highest or lowest absolute priority, for a total of 240 different transmit priorities.

A decided bit time counter (16-bit wide) is provided to support real time applications. The contents of this counter are captured into the message buffer RAM on reception or transmission. The counter can be synchronized through the CAN network. This synchronization feature allows a reset of the counter after the reception or transmission of a message in buffer 0.

The CAN module is a fast CPU bus peripheral which allows single-cycle byte or word read/write access. The CPU controls the CAN module by programming the registers in the CAN register block. This includes initialization of the CAN baud rate, logic level of the CAN pins, and enable/disable of the CAN module. A set of diagnostic features, such as loopback, listen only, and error identification, support development with the CAN module and provide a sophisticated error management tool.

The CAN module implements the following features:

- CAN specification 2.0B
  - — Standard data and remote frames
  - — Extended data and remote frames
  - — 0 to 8 bytes data length
  - — Programmable bit rate up to 1 Mbit/s
- 15 message buffers, each configurable as receive or transmit buffers
  - — Message buffers are 16-bit wide dual-port RAM
  - — One buffer may be used as a BASIC-CAN path
- Remote Frame support
  - — Automatic transmission after reception of a Remote Transmission Request (RTR)
  - — Auto receive after transmission of a RTR
- Acceptance filtering
  - — Two filtering capabilities: global acceptance mask and individual buffer identifiers
  - — One of the buffers uses an independent acceptance filtering procedure
- Programmable transmit priority
- Interrupt capability
  - — One interrupt vector for all message buffers (receive/transmit/error)
  - — Each interrupt source can be enabled/disabled
- 16-bit counter with time stamp capability on successful reception or transmission of a message
- Power Save capabilities with programmable Wake-Up over the CAN bus (alternate source for the Multi-Input Wake-Up module)
- Push-pull capability of the input/output pins
- Diagnostic functions
  - — Error identification
  - — Loopback and listen-only features for test and initialization purposes

16.1 FUNCTIONAL DESCRIPTION

As shown in Figure 25, the CAN module consists of three blocks: the CAN core, interface management, and a dual-ported RAM containing the message buffers.

There are two dedicated device pins for the CAN interface, CANTX as the transmit output and CANRX as the receive input.

The CAN core implements the basic CAN protocol features such as bit-stuffing, CRC calculation/checking, and error management. It controls the transceiver logic and creates error signals according to the bus rules. In addition, it converts the data stream from the CPU (parallel data) to the serial CAN bus data.

The interface management block is divided into the register block and the interface management processor. The register block provides the CAN interface with control information from the CPU and provides the CPU with status information from the CAN module. Additionally, it generates the interrupt to the CPU.

The interface management processor is a state machine executing the CPU's transmission and reception commands and controlling the data transfer between several message buffers and the RX/TX shift registers.

15 message buffers are memory mapped into RAM to transmit and receive data through the CAN bus. Eight 16-bit registers belong to each buffer. One of the registers contains control and status information about the message buffer configuration and the current state of the buffer. The other registers are used for the message identifier, a maximum of up to eight data bytes, and the time stamp information. During the receive process, the incoming message will be stored in a hidden receive buffer until the message is valid. Then, the buffer contents will be copied into the first message buffer which accepts the ID of the received message.

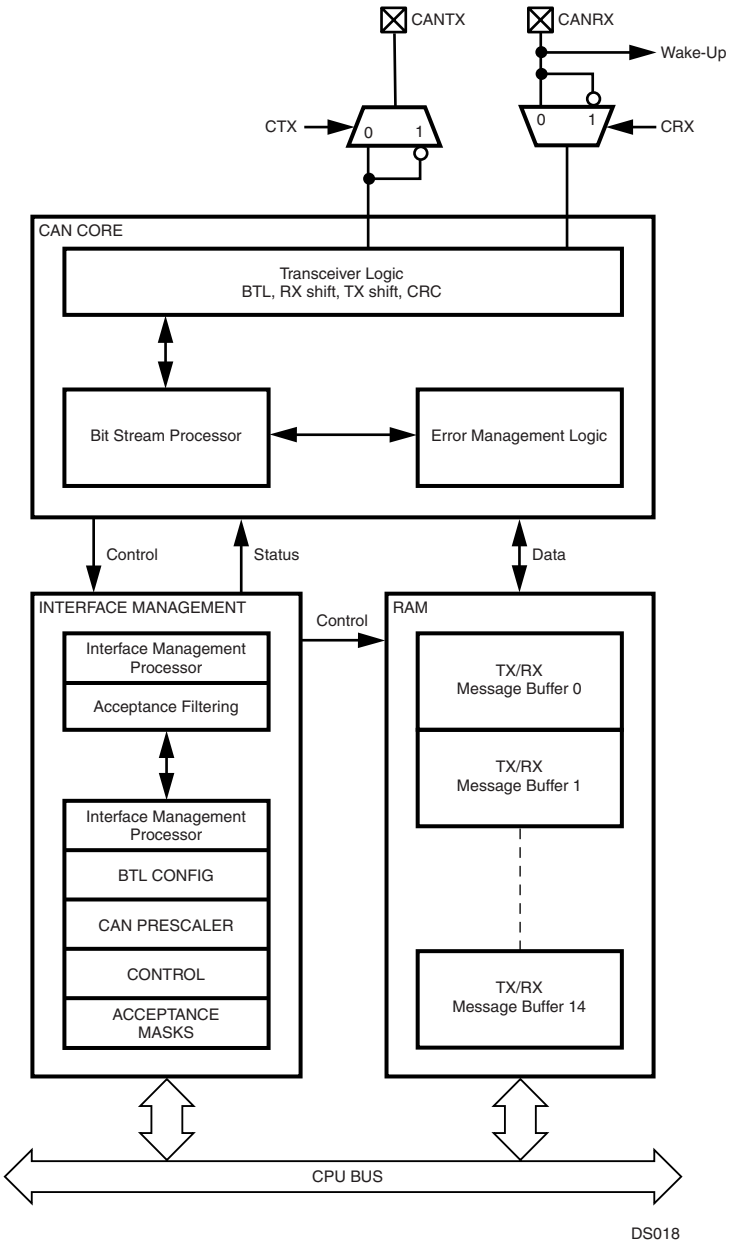

Figure 25. CAN Block Diagram

16.2 BASIC CAN CONCEPTS

This section provides a generic overview of the basic concepts of the Controller Area Network (CAN).

The CAN protocol is a message-based protocol that allows a total of 2032 (2^{11} - 16) different messages in the standard format and 512 million (2^{29} - 16) different messages in the extended frame format.

Every CAN Frame is broadcast on the common bus. Each module receives every frame and filters out the frames which are not required for the module's task. For example, if a dashboard sends a request to switch on headlights, the CAN module responsible for brake lights must not process this message.

A CAN master module has the ability to set a specific bit called the “remote data request bit” (RTR) in a frame. Such a message is also called a “Remote Frame”. It causes another module, either another master or a slave which accepts this remote frame, to transmit a data frame after the remote frame has been completed.

Additional modules can be added to an existing network without a configuration change. These modules can either perform completely new functions requiring new data, or process existing data to perform a new functionality.

As the CAN network is message oriented, a message can be used as a variable which is automatically updated by the controlling processor. If any module cannot process information, it can send an overload frame.

The CAN protocol allows several transmitting modules to start a transmission at the same time as soon as they detect the bus is idle. During the start of transmission, every node monitors the bus line to detect whether its message is overwritten by a message with a higher priority. As soon as a transmitting module detects another module with a higher priority accessing the bus, it stops transmitting its own frame and switches to receive mode, as shown in Figure 26.

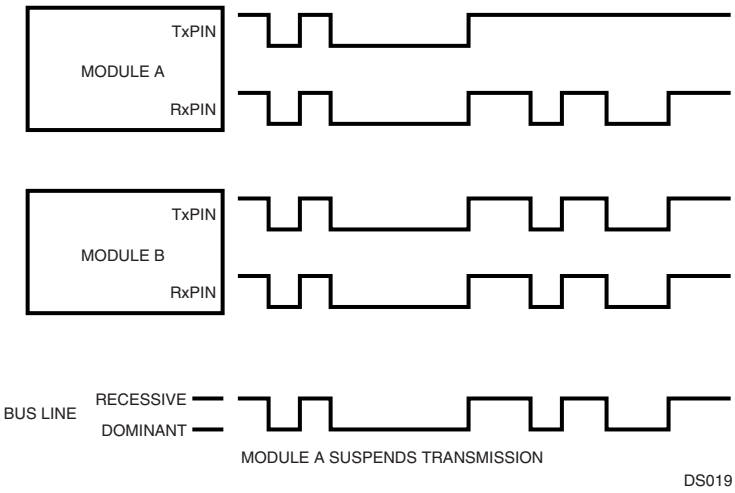

Figure 26. CAN Message Arbitration

If a data or remote frame loses arbitration on the bus due to a higher-prioritized data or remote frame, or if it is destroyed by an error frame, the transmitting module will automatically retransmit it until the transmission is successful or software has canceled the transmit request.

If a transmitted message loses arbitration, the CAN module will restart transmission at the next possible time with the message which has the highest internal transmit priority.

16.2.1 CAN Frame Types

Communication via the CAN bus is basically established by means of four different frame types:

- Data Frame
- Remote Frame
- Error Frame
- Overload Frame

Data and remote frames can be used in both standard and extended frame format. If no message is being transmitted, i.e., the bus is idle, the bus is kept at the “recessive” level.

Remote and data frames are non-return to zero (NRZ) coded with bit-stuffing in every bit field, which holds computable information for the interface, i.e., start of frame, arbitration field, control field, data field (if present), and CRC field.

Error and overload frames are also NRZ coded, but without bit-stuffing.

After five consecutive bits of the same value (including inserted stuff bits), a stuff bit of the inverted value is inserted into the bit stream by the transmitter and deleted by the receiver. The following shows the stuffed and destuffed bit stream for consecutive ones and zeros.

Original or unstuffed bit stream	10000011111 . . .	01111100000 . . .
Stuffed bit stream (stuff bits in bold)	100000**1**1111**0**1 . . .	01111**1**0000**1**0 . . .

16.2.2 CAN Frame Fields

Data and remote frames consist of the following bit fields:

- Start of Frame (SOF)
- Arbitration Field
- Control Field
- Data Field
- CRC Field
- ACK Field
- EOF Field

Start of Frame (SOF)

The Start of Frame (SOF) indicates the beginning of data and remote frames. It consists of a single “dominant” bit. A node is only allowed to start transmission when the bus is idle. All nodes have to synchronize to the leading edge (first edge after the bus was idle) caused by the SOF of the node which starts transmission first.

Arbitration Field

The Arbitration field consists of the identifier field and the RTR (Remote Transmission Request) bit. For extended frames there is also a SRR (Substitute Remote Request) and a IDE (ID Extension) bit inserted between ID18 and ID17 of the identifier field. The value of the RTR bit is “dominant” in a data frame and “recessive” in a remote frame.

Control Field

The Control field consists of six bits. For standard frames it starts with the ID Extension bit (IDE) and a reserved bit (RB0). For extended frames, the control field starts with two reserved bits (RB1, RB0). These bits are followed by the 4-bit Data Length Code (DLC).

The CAN receiver accepts all possible combinations of the reserved bits (RB1, RB0). The transmitter must be configured to send only zeros.

Data Length Code (DLC)

The DLC field indicates the number of bytes in the data field. It consists of four bits. The data field can be of length zero. The admissible number of data bytes for a data frame ranges from 0 to 8.

Data Field

The Data field consists of the data to be transferred within a data frame. It can contain 0 to 8 bytes. A remote frame has no data field.

Cyclic Redundancy Check (CRC)

The CRC field consists of the CRC sequence followed by the CRC delimiter. The CRC sequence is derived by the transmitter from the modulo 2 division of the preceding bit fields, starting with the SOF up to the end of the data field, excluding stuff-bits, by the generator polynomial:

$$x^{15} + x^{14} + x^{10} + x^{8} + x^{7} + x^{4} + x^{3} + 1$$

The remainder of this division is the CRC sequence transmitted over the bus. On the receiver side, the module divides all bit fields up to the CRC delimiter excluding stuff bits, and checks if the result is zero. This will then be interpreted as a valid CRC. After the CRC sequence a single “recessive” bit is transmitted as the CRC delimiter.

ACK Field

The ACK field is two bits long and contains the ACK slot and the ACK delimiter. The ACK slot is filled with a “recessive” bit by the transmitter. This bit is overwritten with a “dominant” bit by every receiver that has received a correct CRC sequence. The second bit of the ACK field is a “recessive” bit called the acknowledge delimiter.

The End of Frame field closes a data and a remote frame. It consists of seven “recessive” bits.

16.2.3 CAN Frame Formats

Data Frame

The structure of a standard data frame is shown in Figure 27. The structure of an extended data frame is shown in Figure 28.

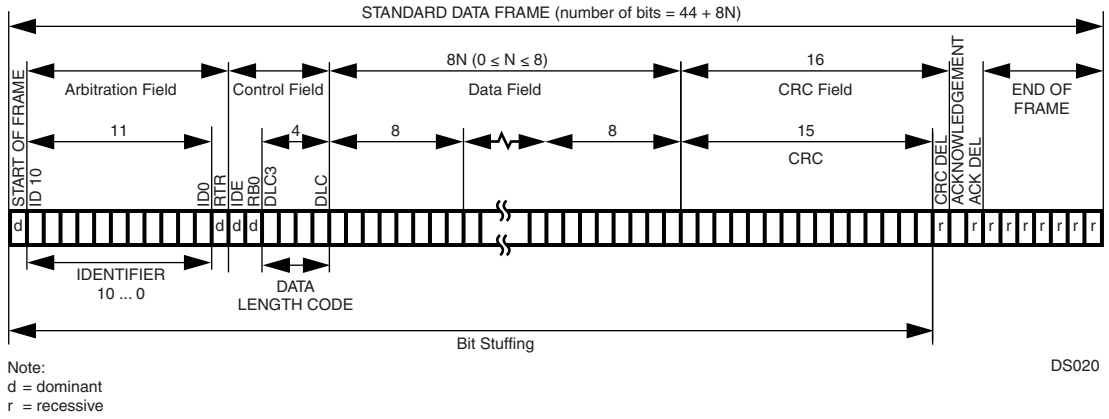

Figure 27. Standard Data Frame

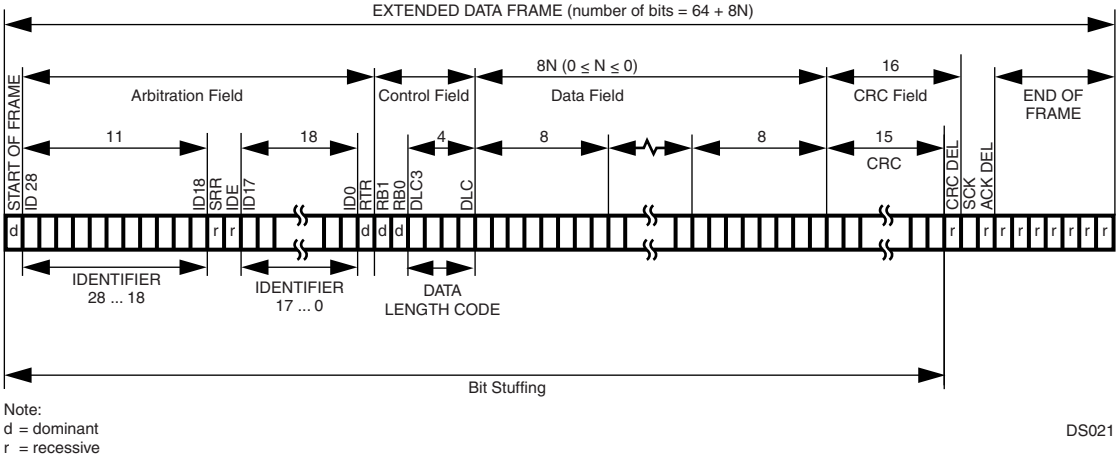

Figure 28. Extended Data Frame

A CAN data frame consists of the following fields:

- Start of Frame (SOF)
- Arbitration Field + Extended Arbitration
- Control Field
- Data Field
- Cyclic Redundancy Check Field (CRC)
- Acknowledgment Field (ACK)
- End of Frame (EOF)

Remote Frame

Figure 29 shows the structure of a standard remote frame. Figure 30 shows the structure of an extended remote frame.

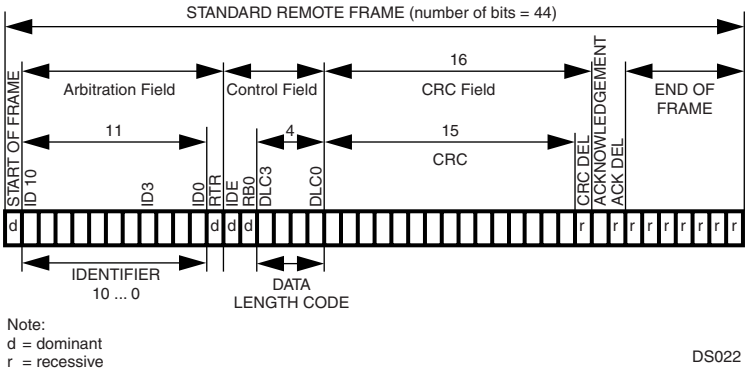

Figure 29. Standard Remote Frame

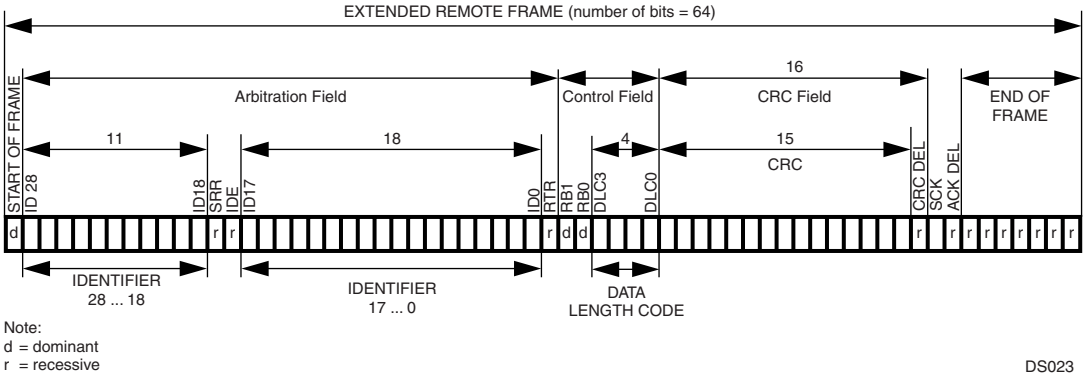

Figure 30. Extended Remote Frame

A remote frame is comprised of the following fields, which is the same as a data frame (see CAN Frame Fields on page 78) except for the data field, which is not present.

- Start of Frame (SOF)
- Arbitration Field + Extended Arbitration
- Control Field
- Cyclic Redundancy Check Field (CRC)
- Acknowledgment field (ACK)
- End of Frame (EOF)

Note that the DLC must have the same value as the corresponding data frame to prevent contention on the bus. The RTR bit is “recessive”.

Error Frame

As shown in Figure 31, the Error Frame consists of the error flag and the error delimiter bit fields. The error flag field is built up from the various error flags of the different nodes. Therefore, its length may vary from a minimum of six bits up to a maximum of twelve bits depending on when a module has detected the error. Whenever a bit error, stuff error, form error, or acknowledgment error is detected by a node, the node starts transmission of an error flag at the next bit. If a CRC error is detected, transmission of the error flag starts at the bit following the acknowledge delimiter, unless an error flag for a previous error condition has already been started.

If a device is in the error active state, it can send a "dominant" error flag, while a error passive device is only allowed to transmit "recessive" error flags. This is done to prevent the CAN bus from getting stuck due to a local defect. For the various CAN device states, please refer to Error Types on page 82.

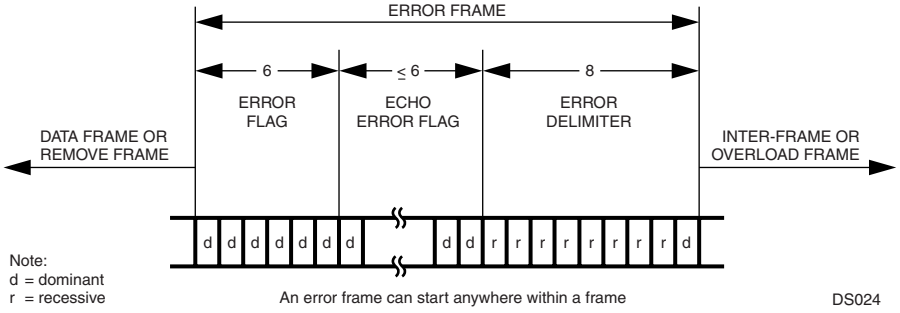

Figure 31. Error Frame

Overload Frame

As shown in Figure 32, an overload frame consists of the overload flag and the overload delimiter bit fields. The bit fields have the same length as the error frame field: six bits for the overload flag and eight bits for the delimiter. The overload frame can only be sent after the end of frame (EOF) field and in this way destroys the fixed form of the intermission field. As a result, all other nodes also detect an overload condition and start the transmission of an overload flag. After an overload flag has been transmitted, the overload frame is closed by the overload delimiter.

Note: The CAN module never initiates an overload frame due to its inability to process an incoming message. However, it is able to recognize and respond to overload frames initiated by other devices.

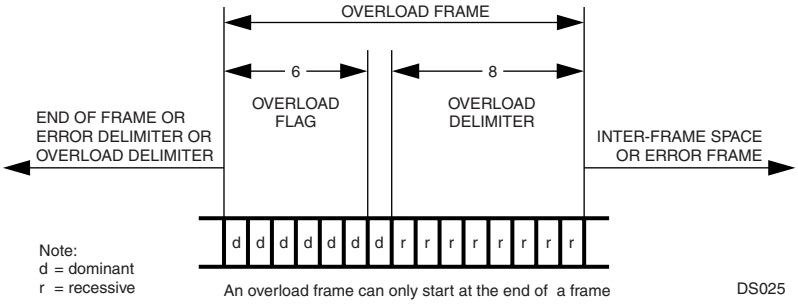

Figure 32. Overload Frame

Interframe Space

Data and remote frames are separated from every preceding frame (data, remote, error and overload frames) by the interframe space (see Figure 33). Error and overload frames are not preceded by an interframe space; they can be transmitted as soon as the condition occurs. The interframe space consists of a minimum of three bit fields depending on the error state of the node.

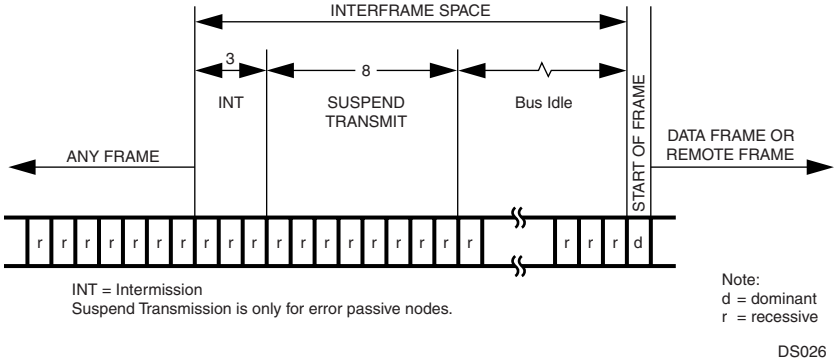

Figure 33. Interframe Space

16.2.4 Error Types

Bit Error

A CAN device which is currently transmitting also monitors the bus. If the monitored bit value is different from the transmitted bit value, a bit error is detected. However, the reception of a “dominant” bit instead of a “recessive” bit during the transmission of a passive error flag, during the stuffed bit stream of the arbitration field, or during the acknowledge slot is not interpreted as a bit error.

Stuff Error

A stuff error is detected if 6 consecutive bits occur without a state change in a message field encoded with bit stuffing.

Form Error

A form error is detected, if a fixed frame bit (e.g., CRC delimiter, ACK delimiter) does not have the specified value. For a receiver, a “dominant” bit during the last bit of End of Frame does not constitute a frame error.

Bit CRC Error

A CRC error is detected if the remainder from the CRC calculation of a received CRC polynomial is non-zero.

Acknowledgment Error

An acknowledgment error is detected whenever a transmitting node does not get an acknowledgment from any other node (i.e., when the transmitter does not receive a “dominant” bit during the ACK frame).

Error States

The device can be in one of five states with respect to error handling (see Figure 34).

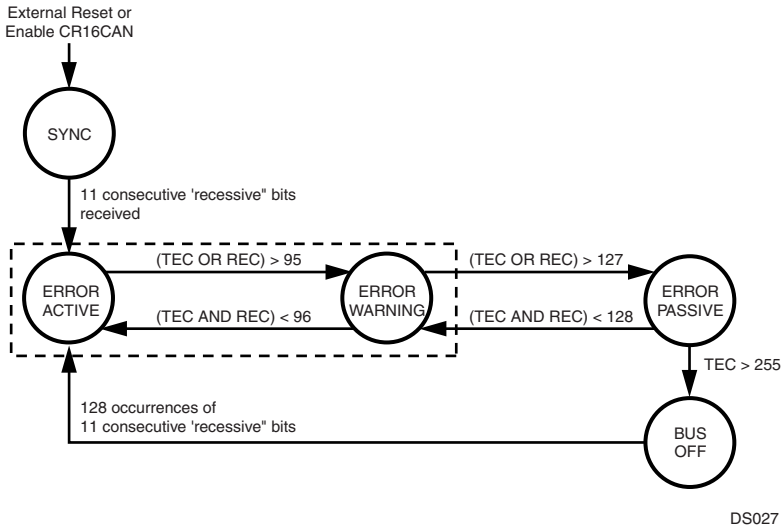

Figure 34. Bus States

Synchronize

Once the CAN module is enabled, it waits for 11 consecutive recessive bits to synchronize with the bus. After that, the CAN module becomes error active and can participate in the bus communication. This state must also be entered after waking-up the device using the Multi-Input Wake-Up feature. See System Start-Up and Multi-Input Wake-Up on page 107.

Error Active

An error active unit can participate in bus communication and may send an active ("dominant") error flag.

Error Warning

The Error Warning state is a sub-state of Error Active to indicate a heavily disturbed bus. The CAN module behaves as in Error Active mode. The device is reset into the Error Active mode if the value of both counters is less than 96.

Error Passive

An error passive unit can participate in bus communication. However, if the unit detects an error it is not allowed to send an active error flag. The unit sends only a passive ("recessive") error flag. A device is error passive when the transmit error counter or the receive error counter is greater than 127. A device becoming error passive will send an active error flag. An error passive device becomes error active again when both transmit and receive error counter are less than 128.

Bus Off

A unit that is bus off has the output drivers disabled, i.e., it does not participate in any bus activity. A device is bus off when the transmit error counter is greater than 255. A bus off device will become error active again after monitoring 128 × 11 "recessive" bits (including bus idle) on the bus. When the device goes from "bus off" to "error active", both error counters will have a value of 0.

16.2.5 Error Counters

There are multiple mechanisms in the CAN protocol to detect errors and inhibit erroneous modules from disabling all bus activities. Each CAN module includes two error counters to perform error management. The receive error counter (REC) and the transmit error counter (TEC) are 8-bits wide, located in the 16-bit wide CANEC register. The counters are modified by the CAN module according to the rules listed in Table 35. This table provides an overview of the CAN error conditions and the behavior of the CAN module; for a detailed description of the error management and fault confinement rules, refer to the CAN Specification 2.0B.

If the MSB (bit 7) of the REC is set, the node is error passive and the REC will not increment any further.

The Error counters can be read by application software as described under CAN Error Counter Register (CANEC) on page 106.

Table 35 Error Counter Handling

Condition	Action
Receive Error Counter Conditions	
A receiver detects a bit error during sending an active error flag.	Increment by 8
A receiver detects a "dominant" bit as the first bit after sending an error flag	Increment by 8
After detecting the 14th consecutive "dominant" bit following an active error flag or overload flag, or after detecting the 8th consecutive "dominant" bit following a passive error flag. After each sequence of additional 8 consecutive "dominant" bits.	Increment by 8
Any other error condition (stuff, frame, CRC, ACK)	Increment by 1
A valid reception or transmission	Decrement by 1 unless counter is already 0
Transmit Error Counter Conditions	
A transmitter detects a bit error while sending an active error flag	Increment by 8
After detecting the 14th consecutive "dominant" bit following an active error flag or overload flag or after detecting the 8th consecutive "dominant" bit following a passive error flag. After each sequence of additional 8 consecutive 'dominant' bits.	Increment by 8
Any other error condition (stuff, frame, CRC, ACK)	Increment by 8
A valid reception or transmission	Decrement by 1 unless counter is already 0

Special error handling for the TEC counter is performed in the following situations:

- A stuff error occurs during arbitration, when a transmitted "recessive" stuff bit is received as a "dominant" bit. This does not lead to an increment of the TEC.
- An ACK-error occurs in an error passive device and no "dominant" bits are detected while sending the passive error flag. This does not lead to an increment of the TEC.
- If only one device is on the bus and this device transmits a message, it will get no acknowledgment. This will be detected as an error and the message will be repeated. When the device goes "error passive" and detects an acknowledge error, the TEC counter is not incremented. Therefore the device will not go from "error passive" to the "bus off" state due to such a condition.

16.2.6 Bit Time Logic

In the Bit Time Logic (BTL), the CAN bus speed and the Synchronization Jump Width can be configured by software. The CAN module divides a nominal bit time into three time segments: synchronization segment, time segment 1 (TSEG1), and time segment 2 (TSEG2). Figure 35 shows the various elements of a CAN bit time.

CAN Bit Time

The number of time quanta in a CAN bit (CAN Bit Time) ranges between 4 and 25. The sample point is positioned between TSEG1 and TSEG2 and the transmission point is positioned at the end of TSEG2.

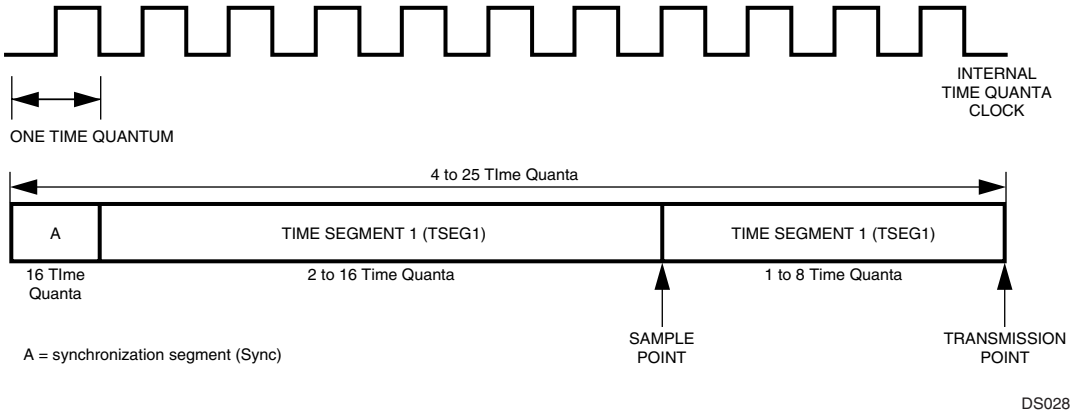

Figure 35. Bit Timing

TSEG1 includes the propagation segment and the phase segment 1 as specified in the CAN specification 2.0B. The length of the time segment 1 in time quanta (tq) is defined by the TSEG1[3:0] bits.

TSEG2 represents the phase segment 2 as specified in the CAN specification 2.0B. The length of time segment 2 in time quanta (tq) is defined by the TSEG2[3:0] bits.

The Synchronization Jump Width (SJW) defines the maximum number of time quanta (tq) by which a received CAN bit can be shortened or lengthened in order to achieve re-synchronization on “recessive” to “dominant” data transitions on the bus. In the CAN implementation, the SJW must be configured less or equal to TSEG1 or TSEG2, whichever is smaller.

Synchronization

A CAN device expects the transition of the data signal to be within the synchronization segment of each CAN bit time. This segment has the fixed length of one time quantum.

However, two CAN nodes never operate at exactly the same clock rate, and the bus signal may deviate from the ideal waveform due to the physical conditions of the network (bus length and load). To compensate for the various delays within a network, the sample point can be positioned by programming the length of TSEG1 and TSEG2 (see Figure 35).

In addition, two types of synchronization are supported. The BTL logic compares the incoming edge of a CAN bit with the internal bit timing. The internal bit timing can be adapted by either hard or soft synchronization (re-synchronization).

Hard synchronization is performed at the beginning of a new frame with the falling edge on the bus while the bus is idle. This is interpreted as the SOF. It restarts the internal logic.

Soft synchronization is performed during the reception of a bit stream to lengthen or shorten the internal bit time. Depending on the phase error (e), TSEG1 may be increased or TSEG2 may be decreased by a specific value, the resynchronization jump width (SJW).

The phase error is given by the deviation of the edge to the SYNC segment, measured in CAN clocks. The value of the phase error is defined as:

e = 0, if the edge occurs within the SYNC segment
e > 0, if the edge occurs within TSEG1
e < 0, if the edge occurs within TSEG2 of the previous bit

Resynchronization is performed according to the following rules:

- If the magnitude of e is less then or equal to the programmed value of SJW, resynchronization will have the same effect as hard synchronization.
- If e > SJW, TSEG1 will be lengthened by the value of the SJW (see Figure 36).
- If e < -SJW, TSEG2 will be shortened by the value SJW (see Figure 37).

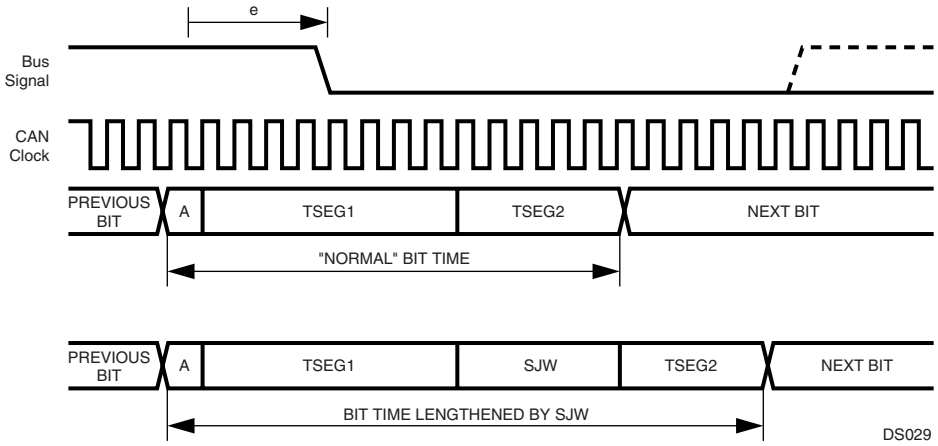

Figure 36. Resynchronization (e > SJW)

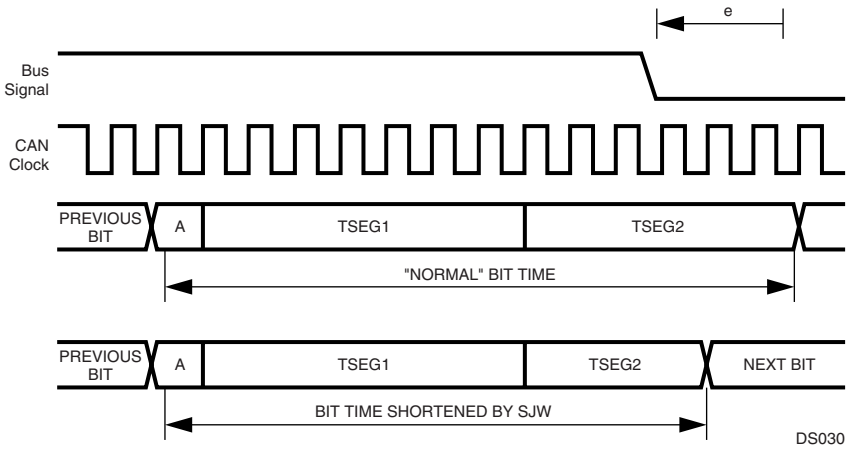

Figure 37. Resynchronization (e < -SJW)

16.2.7 Clock Generator

The CAN prescaler (PSC) is shown is Figure 38. It divides the CKI input clock by the value defined in the CTIM register. The resulting clock is called time quanta clock and defines the length of one time quantum (tq).

Please refer to CAN Timing Register (CTIM) on page 102 for a detailed description of the CTIM register.

Note: PSC is the value of the clock prescaler. TSEG1 and TSEG2 are the length of time segment 1 and 2 in time quanta.

The resulting bus clock can be calculated by the equation:

$$\text{busclock} = \frac{\text{CKI}}{(\text{PSC})\text{x}(1 + \text{TSEG1} + \text{TSEG2})}$$

The values of PSC, TSEG1, and TSEG2 are specified by the contents of the registers PSC, TSEG1, and TSEG2 as follows:

PSC = PSC[5:0] + 2
TSEG1 = TSEG1[3:0] + 1
TSEG2 = TSEG2[2:0] + 1

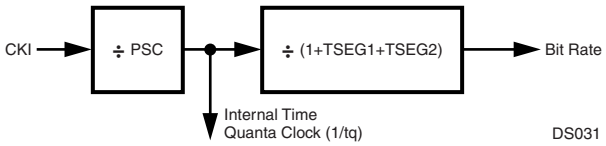

Figure 38. CAN Prescaler

16.3 MESSAGE TRANSFER

The CAN module has access to 15 independent message buffers, which are memory mapped in RAM. Each message buffer consists of 8 different 16-bit RAM locations and can be individually configured as a receive message buffer or as a transmit message buffer.

A dedicated acceptance filtering procedure enables software to configure each buffer to receive only a single message ID or a group of messages. One buffer uses an

independent filtering procedure, which provides the possibility to establish a BASIC-CAN path.

For reception of data frame or remote frames, the CAN module follows a “receive on first match” rule which means that a given message is only received by one buffer: the first one which matches the received message ID.

The transmission of a frame can be initiated by software writing to the transmit status and priority register. An alternate way to schedule a transmission is the automatic answer to remote frames. In the latter case, the CAN module will schedule every buffer for transmission to respond to remote frames with a given identifier if the acceptance mask matches. This implies that a single remote frame is able to poll multiple matching buffers configured to respond to the triggering remote transmission request.

16.4 ACCEPTANCE FILTERING

Two 32-bit masks are used to filter unwanted messages from the CAN bus: GMASK and BMASK. Figure 39 shows the mask and the buffers controlled by the masks.

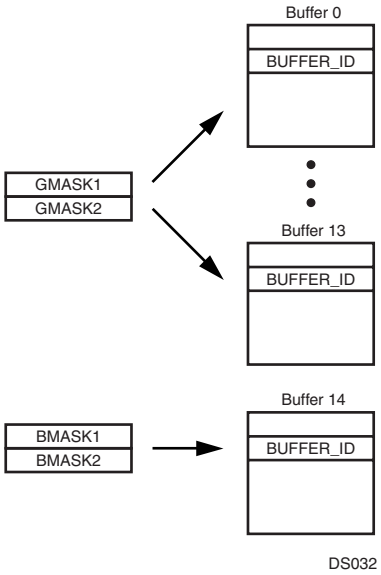

Figure 39. Acceptance Filtering

Acceptance filtering of the incoming messages for the buffers 0...13 is performed by means of a global filtering mask (GMASK) and by the buffer ID of each buffer. Acceptance filtering of incoming messages for buffer 14 is performed by a separate filtering mask (BMASK) and by the buffer ID of that buffer.

Once a received object is waiting in the hidden buffer to be copied into a buffer, the CAN module scans all buffers configured as receive buffers for a matching filtering mask. The buffers 0 to 13 are checked in ascending order beginning with buffer 0. The contents of the hidden buffer are copied into the first buffer with a matching filtering mask.

Bits holding a 1 in the global filtering mask (GMASK) can be represented as a “don’t care” of the associated bit of each buffer identifier, regardless of whether the buffer identifier bit is 1 or 0.

This provides the capability to accept only a single ID for each buffer or to accept a group of IDs. The following two examples illustrate the difference.

Example 1: Acceptance of a Single Identifier

If the global mask is loaded with 00h, the acceptance filtering of an incoming message is only determined by the individual buffer ID. This means that only one message ID is accepted for each buffer.

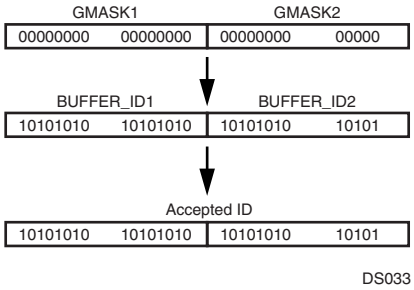

Figure 40. Acceptance of a Single Identifier

Example 2: Reception of an Identifier Group

Set bits in the global mask register change the corresponding bit status within the buffer ID to “don’t care” (X). Messages which match the non-“don’t care” bits (the bits corresponding to clear bits in the global mask register) are accepted.

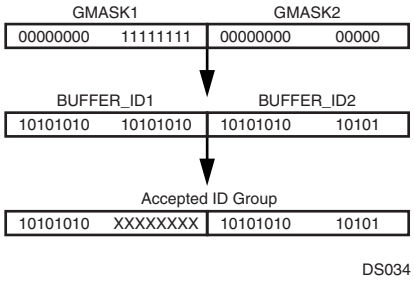

Figure 41. Acceptance of a Group of Identifiers

A separate filtering path is used for buffer 14. For this buffer, acceptance filtering is established by the buffer ID in conjunction with the basic filtering mask. This basic mask uses the same method as the global mask (set bits correspond to “don’t care” bits in the buffer ID).

Therefore, the basic mask allows a large number of infrequent messages to be received by this buffer.

Note: If the BMASK register is equal to the GMASK register, the buffer 14 can be used the same way as the buffers 0 to 13.

The buffers 0 to 13 are scanned prior to buffer 14. Subsequently, the buffer 14 will not be checked for a matching ID when one of the buffers 0 to 13 has already received an object.

By setting the BUFFLOCK bit in the configuration register, the receiving buffer is automatically locked after reception of one valid frame. The buffer will be unlocked again after the CPU has read the data and has written RX_READY in the

buffer status field. With this lock function, software has the capability to save several messages with the same identifier or same identifier group into more than one buffer. For example, a buffer with the second highest priority will receive a message if the buffer with the highest priority has already received a message and is now locked (provided that both buffers use the same acceptance filtering mask).

As shown in Figure 42, several messages with the same ID are received while BUFFLOCK is enabled. The filtering mask of the buffers 0, 1, 13, and 14 is set to accept this message. The first incoming frame will be received by buffer 0. Because buffer 0 is now locked, the next frame will be received by buffer 1, and so on. If all matching receive buffers are full and locked, a further incoming message will not be received by any buffer.

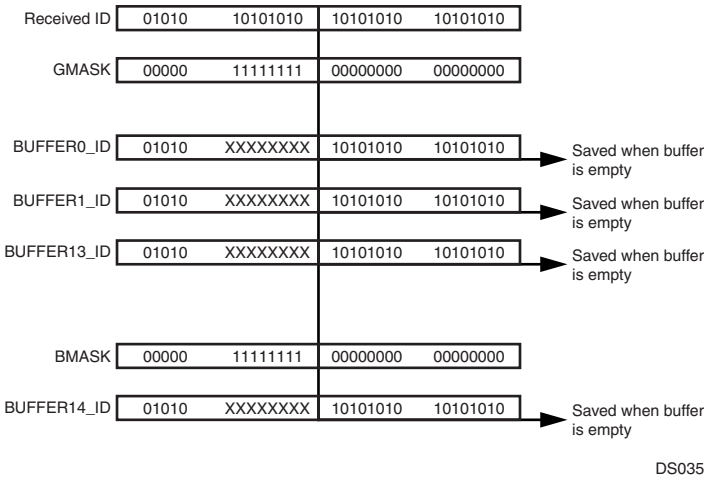

Figure 42. Message Storage with BUFFLOCK Enabled

16.5 RECEIVE STRUCTURE

All received frames are initially buffered in a hidden receive buffer until the frame is valid. (The validation point for a received message is the next-to-last bit of the EOF.) The received identifier is then compared to every buffer ID together with the respective mask and the status. As soon as the validation point is reached, the whole contents of the hidden buffer are copied into the matching message buffer as shown in Figure 43.

Note: The hidden receive buffer must not be accessed by the CPU.

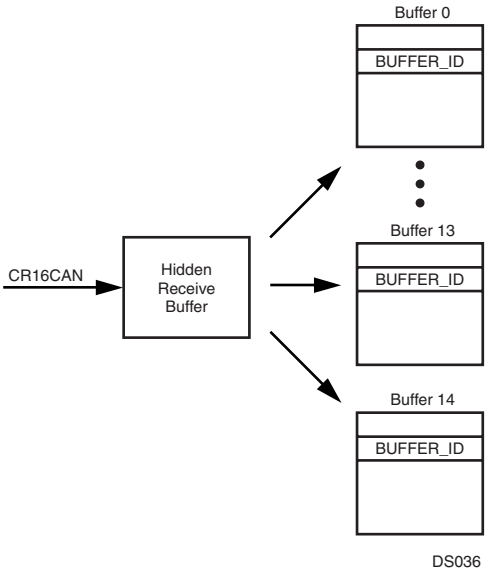

Figure 43. Receive Buffer

The following section gives an overview of the reception of the different types of frames.

The received data frame is stored in the first matching receive buffer beginning with buffer 0. For example, if the message is accepted by buffer 5, then at the time the message will be copied, the RX request is cleared and the CAN module will not try to match the frame to any subsequent buffer.

All contents of the hidden receive buffer are always copied into the respective receive buffer. This includes the received message ID as well as the received Data Length Code (DLC); therefore when some mask bits are set to don't care, the ID field will get the received message ID which could be different from the previous ID. The DLC of the receiving buffer will be updated by the DLC of the received frame. The DLC of the received message is not compared with the DLC already present in the CNSTAT register of the message buffer. This implies that the DLC code of the CNSTAT register indicates how may data bytes actually belong to the latest received message.

The remote frames are handled by the CAN interface in two different ways. In the first method, remote frames can be received like data frames by configuring the buffer to be RX_READY and setting the ID bits including the RTR bit. In that case, the same procedure applies as described for Data Frames. In the second method, a remote frame can trigger one or more message buffer to transmit a data frame upon reception. This procedure is described under To Answer Remote Frames on page 90.

16.5.1 Receive Timing

As soon as the CAN module receives a "dominant" bit on the CAN bus, the receive process is started. The received ID and data will be stored in the hidden receive buffer if the global or basic acceptance filtering matches. After the reception of the data, CAN module tries to match the buffer ID of buffer 0...14. The data will be copied into the buffer after the reception of the 6th EOF bit as a message is valid at this time. The copy process of every frame, regardless of the length, takes at least 17 CKI cycles (see also CPU Access to CAN Registers/Memory on page 94). Figure 44 shows the receive timing.

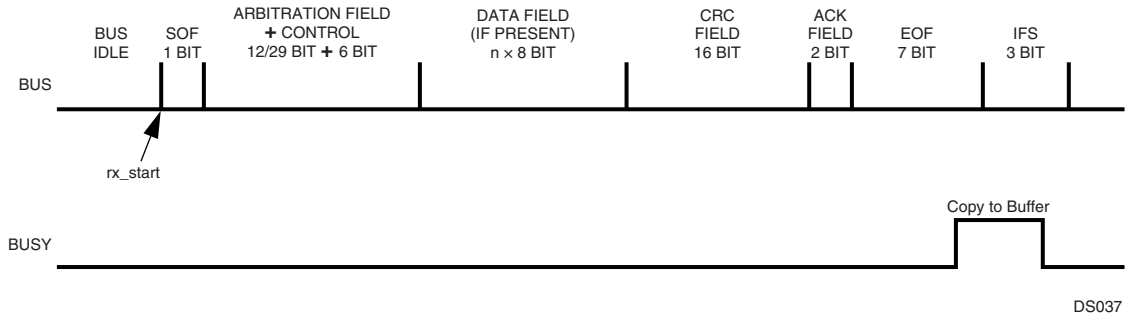

Figure 44. Receive Timing

To indicate that a frame is waiting in the hidden buffer, the BUSY bit (ST[0]) of the selected buffer is set during the copy procedure. The BUSY bit will be cleared by the CAN module immediately after the data bytes are copied into the buffer. After the copy process is finished, the CAN module changes the status field to RX_FULL. In turn, the CPU should change the status field to RX_READY when the data is processed. When a new object has been received by the same buffer, before the CPU changed the status to RX_READY, the CAN module will change the status to RX_OVERRUN to indicate that at least one frame has been overwritten by a new one. Table 36 summarizes the current status and the resulting update from the CAN module.

Table 36 Writing to Buffer Status Code During RX_BUSY

Current Status	Resulting Status
RX_READY	RX_FULL
RX_NOT_ACTIVE	RX_NOT_ACTIVE
RX_FULL	RX_OVERRUN

During the assertion of the BUSY bit, all writes to the receiving buffer are disabled with the exception of the status field. If the status is changed while the BUSY bit is asserted, the status is updated by the CAN module as shown in Table 36.

The buffer states are indicated and controlled by the ST[3:0] bits in the CNSTAT register (see Buffer Status/Control Register (CNSTAT) on page 95). The various receive buffer states are explained in RX Buffer States on page 89.

16.5.2 Receive Procedure

Software executes the following procedure to initialize a message buffer for the reception of a CAN message.

1. Configure the receive masks (GMASK or BMASK).
2. Configure the buffer ID.
3. Configure the message buffer status as RX_READY.

To read the out of a received message, the CPU must execute the following steps (see Figure 45):

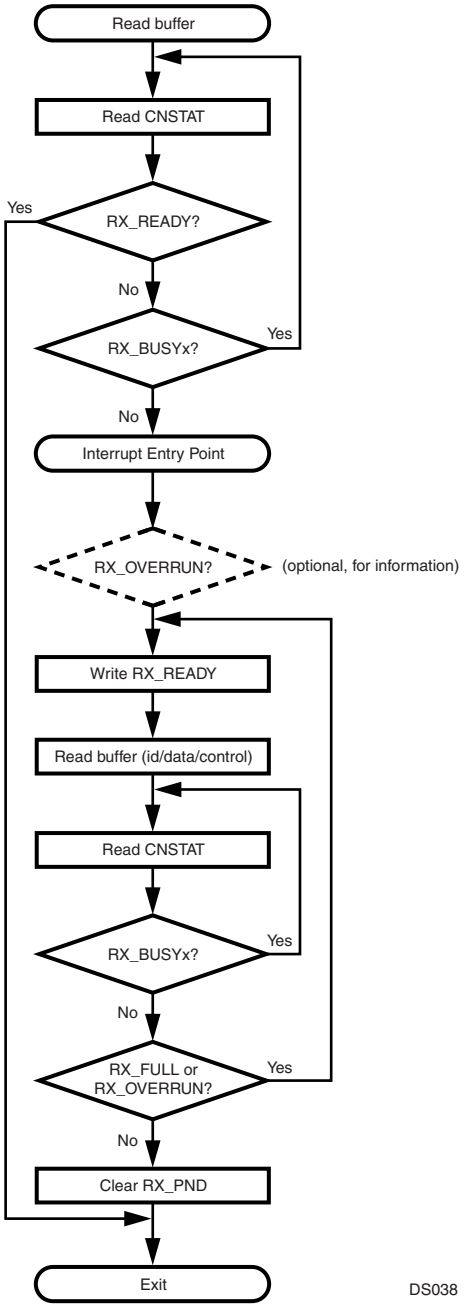

Figure 45. Buffer Read Routine (BUFFLOCK Disabled)

The first step is only applicable if polling is used to get the status of the receive buffer. It can be deleted for an interrupt driven receive routine.

1. Read the status (CNSTAT) of the receive buffer. If the status is RX_READY, no was the message received, so exit. If the status is RX_BUSY, the copy process from hidden receive buffer is not completed yet, so read CNSTAT again.

   If a buffer is configured to RX_READY and its interrupt is enabled, it will generate an interrupt as soon as the buffer has received a message and entered the RX_FULL state (see also Interrupts on page 92). In that case the procedure described below must be followed.
2. Read the status to determine if a new message has overwritten the one originally received which triggered the interrupt.
3. Write RX_READY into CNSTAT.
4. Read the ID/data and object control (DLC/RTR) from the message buffer.
5. Read the buffer status again and check it is not RX_BUSYx. If it is, repeat this step until RX_BUSYx has gone away.
6. If the buffer status is RX_FULL or RX_OVERRUN, one or more messages were copied. In that case, start over with step 2.
7. If status is still RX_READY (as set by the CPU at step 2), clear interrupt pending bit and exit.

When the BUFFLOCK function is enabled (see BUFFLOCK on page 86), it is not necessary to check for new messages received during the read process from the buffer, as this buffer is locked after the reception of the first valid frame. A read from a locked receive buffer can be performed as shown in Figure 46.

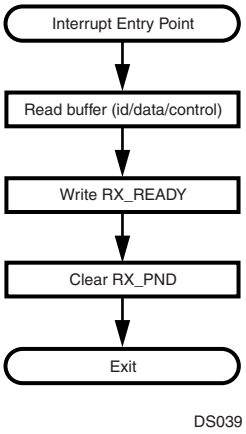

Figure 46. Buffer Read Routine (BUFFLOCK Enabled)

For simplicity only the applicable interrupt routine is shown:

1. Read the ID/data and object control (DLC/RTR) from the message buffer.
2. Write RX_READY into CNSTAT.
3. Clear interrupt pending bit and exit.

16.5.3 RX Buffer States

As shown in Figure 46, a receive procedure starts as soon as software has set the buffer from the RX_NOT_ACTIVE state into the RX_READY state. The status section of CNSTAT register is set from 0000b to 0010b. When a message is received, the buffer will be RX_BUSYx during the copy process from the hidden receive buffer into the message buffer. Afterwards this buffer is RX_FULL. The CPU can then read the buffer data and either reset the buffer status to RX_READY or receive a new frame before the CPU reads the buffer. In the second case, the buffer state will automatically change to RX_OVERRUN to indicate that at least one message was lost. During the copy process the buffer will again be RX_BUSYx for a short time, but in this case the

CNSTAT status section will be 0101b, as the buffer was RX_FULL (0100b) before. After finally reading the last received message, the CPU can reset the buffer to RX_READY.

16.6 TRANSMIT STRUCTURE

To transmit a CAN message, software must configure the message buffer by changing the buffer status to TX_NOT_ACTIVE. The buffer is configured for transmission if the ST[3] bit of the buffer status code (CNSTAT) is set. In TX_NOT_ACTIVE status, the buffer is ready to receive data from the CPU. After receiving all transmission data (ID, data bytes, DLC, and PRI), the CPU can start the transmission by writing TX_ONCE into the buffer status register. During the transmission, the status of the buffer is TX_BUSYx. After successful transmission, the CAN module will reset the buffer status to TX_NOT_ACTIVE. If the transmission process fails, the buffer condition will remain TX_BUSYx for retransmission until the frame was successfully transmitted or the CPU has canceled the transmission request.

To Send a Remote Frame (Remote Transmission Request) to other CAN nodes, software sets the RTR bit of the message identifier (see Storage of Remote Messages on page 99) and changes the status of the message buffer to TX_ONCE. After this remote frame has been transmitted successfully, this message buffer will automatically enter the RX_READY state and is ready to receive the appropriate answer. Note that the mask bits RTR/XRTR need to be set to receive a data frame (RTR = 0) in a buffer which was configured to transmit a remote frame (RTR = 1).

To answer Remote Frames, the CPU writes TX_RTR in the buffer status register, which causes the buffer to wait for a remote frame. When a remote frame passes the acceptance filtering mask of one or more buffers, the buffer status will change to TX_ONCE_RTR, the contents of the buffer will be transmitted, and afterwards the CAN module will write TX_RTR in the status code register again.

If the CPU writes TX_ONCE_RTR into the buffer status, the contents of the buffer will be transmitted, and the successful transmission the buffer goes into the “wait for Remote Frame” condition TX_RTR.

16.6.1 Transmit Scheduling

After writing TX_ONCE into the buffer status, the transmission process begins and the BUSY bit is set. As soon as a buffer gets the TX_BUSY status, the buffer is no longer accessible by the CPU except for the ST[3:1] bits of the CNSTAT register. Starting with the beginning of the CRC field of the current frame, the CAN module looks for another buffer transmit request and selects the buffer with the highest priority for the next transmission by changing the buffer state from TX_ONCE to TX_BUSY. This transmit request can be canceled by the CPU or can be overwritten by another transmit request of a buffer with a higher priority as long as the transmission of the next frame has not yet started. This means that between the beginning of the CRC field of the current frame and the transmission start of the next frame, two buffers, the current buffer and the buffer scheduled for the next transmission, are in the BUSY status. To cancel the transmit request of the next frame, the CPU must change the buffer state to TX_NOT_ACTIVE. When the transmit request has been overwritten by another request of a higher priority buffer, the CAN module changes the buffer state from TX_BUSY to TX_ONCE. Therefore, the transmit request remains pending. Figure 47 further illustrates the transmit timing.

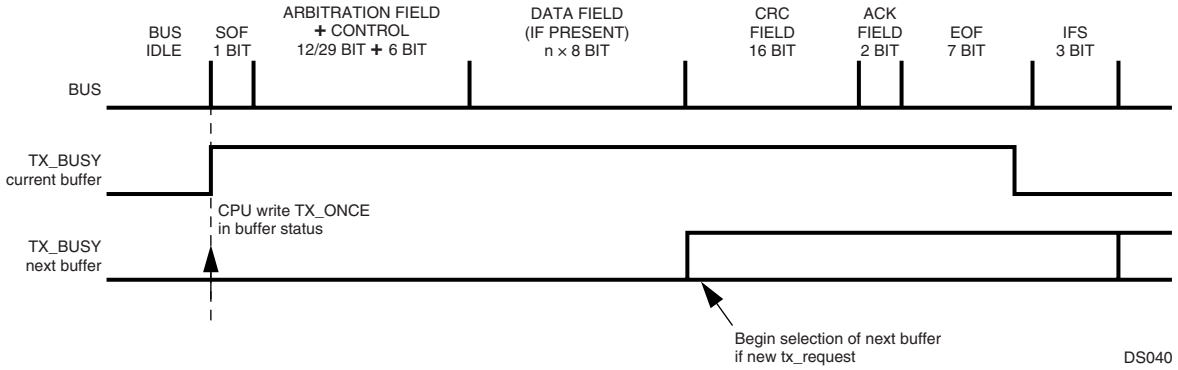

Figure 47. Data Transmission

If the transmit process fails or the arbitration is lost, the transmission process will be stopped and will continue after the interrupting reception or the error signaling has finished (see Figure 47). In that case, a new buffer select follows and the TX process is executed again.

Note: The canceled message can be delayed by a TX request of a buffer with a higher priority. While TX_BUSY is high, software cannot change the contents of the message buffer object. In all cases, writing to the BUSY bit will be ignored.

16.6.2 Transmit Priority

The CAN module is able to generate a stream of scheduled messages without releasing the bus between two messages so that an optimized performance can be achieved. It will arbitrate for the bus immediately after sending the previous message and will only release the bus due to a lost arbitration.

If more than one buffer is scheduled for transmission, the priority is built by the message buffer number and the priority code in the CNSTAT register. The 8-bit value of the prior-

ity is combined by the 4-bit TXPRI value and the 4-bit buffer number (0...14) as shown below. The lowest resulting number results in the highest transmit priority.

7 — 4	3 — 0
TXPRI	BUFFER #

Table 37 shows the transmit priority configuration if the priority is TXPRI = 0 for all transmit buffers:

Table 37 Transmit Priority (TXPRI = 0)

TXPRI	Buffer Number	PRI	TX Priority
0	0	0	Highest
0	1	1	
:	:	:	:
0	14	14	Lowest

Table 38 shows the transmit priority configuration if TXPRI is different from the buffer number:

Table 38 Transmit Priority (TXPRI not 0)

TXPRI	Buffer Number	PRI	TX Priority
14	0	224	Lowest
13	1	209	
12	2	194	
11	3	179	
10	4	164	
9	5	149	
8	6	134	
7	7	119	
6	8	104	
5	9	89	
4	10	74	
3	11	59	
2	12	44	
1	13	29	
0	14	14	Highest

Note: If two buffers have the same priority (PRI), the buffer with the lower buffer number will have the higher priority.

16.6.3 Transmit Procedure

The transmission of a CAN message must be executed as follows (see also Figure 48)

1. Configure the CNSTAT status field as TX_NOT_ACTIVE. If the status is TX_BUSY, a previous transmit request is still pending and software has no access to the data contents of the buffer. In that case, software may choose to wait until the buffer becomes available again as shown. Other options are to exit from the update routine until the buffer has been transmitted with an interrupt generated, or the transmission is aborted by an error.
2. Load buffer identifier and data registers. (For remote frames the RTR bit of the identifier needs to be set and loading data bytes can be omitted.)
3. Configure the CNSTAT status field to the desired value:
   — TX_ONCE to trigger the transmission process of a single frame.
   — TX_ONCE_RTR to trigger the transmission of a single data frame and then wait for a received remote frame to trigger consecutive data frames.
   — TX_RTR waits for a remote frame to trigger the transmission of a data frame.

Writing TX_ONCE or TX_ONCE_RTR in the CNSTAT status field will set the internal transmit request for the CAN module.

If a buffer is configured as TX_RTR and a remote frame is received, the data contents of the addressed buffer will be transmitted automatically without further CPU activity.

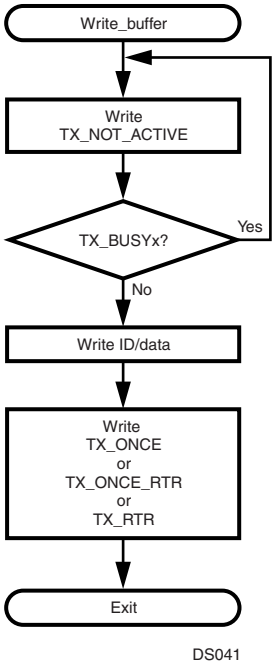

Figure 48. Buffer Write Routine

16.6.4 TX Buffer States

The transmission process can be started after software has loaded the buffer registers (data, ID, DLC, PRI) and set the buffer status from TX_NOT_ACTIVE to TX_ONCE, TX_RTR, or TX_ONCE_RTR.

When the CPU writes TX_ONCE, the buffer will be TX_BUSY as soon as the CAN module has scheduled this buffer for the next transmission. After the frame could be successfully transmitted, the buffer status will be automatically reset to TX_NOT_ACTIVE when a data frame was transmitted or to RX_READY when a remote frame was transmitted.

If the CPU configures the message buffer to TX_ONCE_RTR, it will transmit its data contents. During the transmission, the buffer state is 1111b as the CPU wrote 1110b into the status section of the CNSTAT register. After the successful transmission, the buffer enters the TX_RTR state and waits for a remote frame. When it receives a remote frame, it will go back into the TX_ONCE_RTR state, transmit its data bytes, and return to TX_RTR. If the CPU writes 1010b into the buffer status section, it will only enter the TX_RTR state, but it will not send its data bytes before it waits for a remote frame. Figure 49 illustrates the possible transmit buffer states.

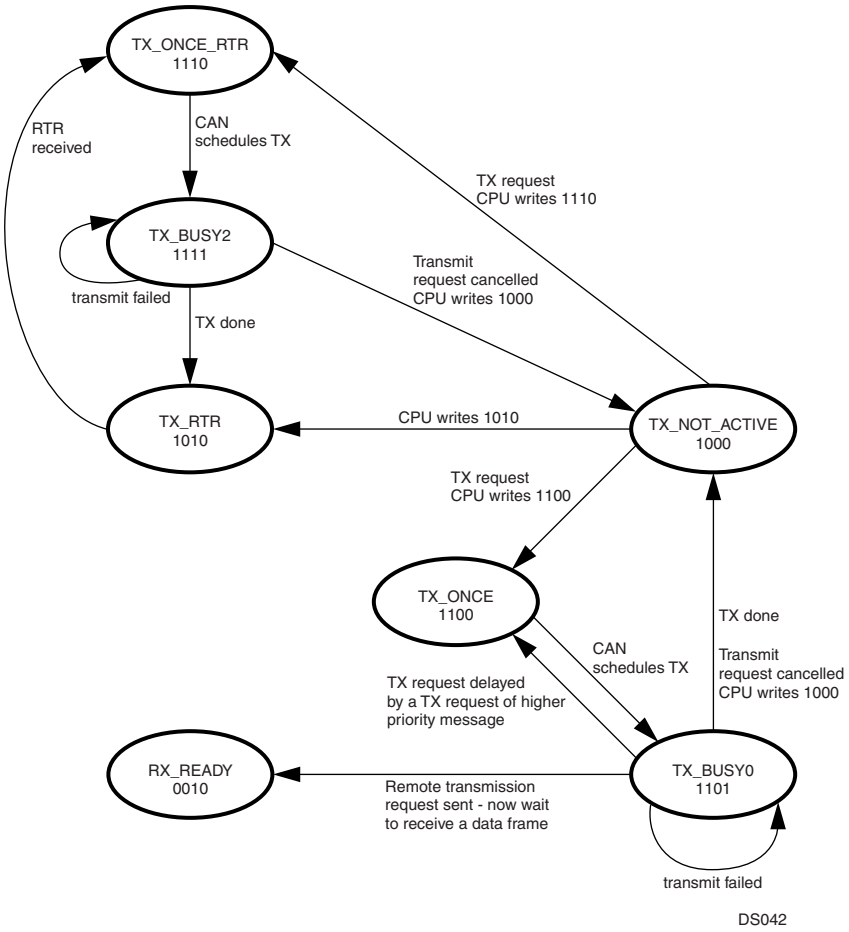

Figure 49. Transmit Buffer States

16.7 INTERRUPTS

The CAN module has one dedicated ICU interrupt vector for all interrupt conditions. In addition, the data frame receive event is an input to the MIWU (see Section 13.0). The interrupt process can be initiated from the following sources.

- CAN data transfer
  - — Reception of a valid data frame in the buffer. (Buffer state changes from RX_READY to RX_FULL or RX_OVERRUN.)
  - — Successful transmission of a data frame. (Buffer state changes from TX_ONCE to TX_NOT_ACTIVE or RX_READY.)
  - — Successful response to a remote frame. (Buffer state changes from TX_ONCE_RTR to TX_RTR.)
  - — Transmit scheduling. (Buffer state changes from TX_RTR to TX_ONCE_RTR.)
- CAN error conditions
  - — Detection of an CAN error. (The CEIPND bit in the CIPND register will be set as well as the corresponding bits in the error diagnostic register CEDIAG.)

The receive/transmit interrupt access to every message buffer can be individually enabled/disabled in the CIEN register. The pending flags of the message buffer are located in the CIPND register (read only) and can be cleared by resetting the flags in the CICLR registers.

16.7.1 Highest Priority Interrupt Code

To reduce the decoding time for the CIPND register, the buffer interrupt request with the highest priority is placed as interrupt status code into the IST[3:0] section of the CSTPND register.

Each of the buffer interrupts as well as the error interrupt can be individually enabled or disabled in the CAN Interrupt Enable register (CIEN). As soon as an interrupt condition occurs, every interrupt request is indicated by a flag in the CAN Interrupt Pending register (CIPND). When the interrupt code logic for the present highest priority interrupt request is enabled, this interrupt will be translated into the IST3:0 bits of the CAN Status Pending register (CSTPND). An interrupt request can be cleared by setting the corresponding bit in the CAN Interrupt Clear register (CICLR).

Figure 50 shows the CAN interrupt management.

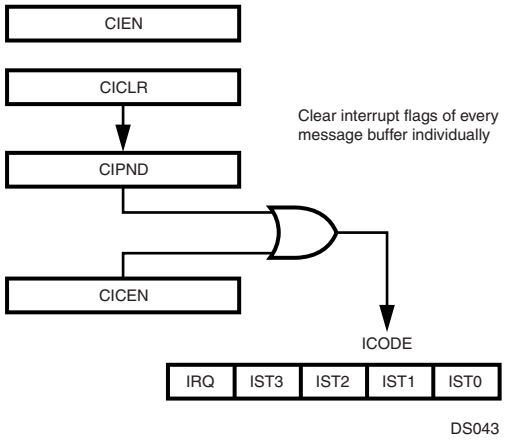

Figure 50. Interrupt Management

The highest priority interrupt source is translated into the bits IRQ and IST3:0 as shown in Table 39.

Table 39 Highest Priority Interrupt Code (ICEN=FFFF)

CAN Interrupt Request	IRQ	IST3	IST2	IST1	IST0
No Request	0	0	0	0	0
Error Interrupt	1	0	0	0	0
Buffer 0	1	0	0	0	1
Buffer 1	1	0	0	1	0
Buffer 2	1	0	0	1	1
Buffer 3	1	0	1	0	0
Buffer 4	1	0	1	0	1
Buffer 5	1	0	1	1	0
Buffer 6	1	0	1	1	1
Buffer 7	1	1	0	0	0
Buffer 8	1	1	0	0	1
Buffer 9	1	1	0	1	0
Buffer 10	1	1	0	1	1
Buffer 11	1	1	1	0	0
Buffer 12	1	1	1	0	1
Buffer 13	1	1	1	1	0
Buffer 14	1	1	1	1	1

16.7.2 Usage Hints

The interrupt code IST3:0 can be used within the interrupt handler as a displacement to jump to the relevant subroutine.

The CAN Interrupt Code Enable (CICEN) register is used in the CAN interrupt handler if software is servicing all receive buffer interrupts first, followed by all transmit buffer interrupts. In this case, software can first enable only receive buffer interrupts to be coded, then scan and service all pending interrupt requests in the order of their priority. After processing all the receive interrupts, software changes the CICEN register to disable all receive buffers and enable all transmit buffers, then services all pending transmit buffer interrupt requests according to their priorities.

16.8 TIME STAMP COUNTER

The CAN module features a free running 16-bit timer (CTMR) incrementing every bit time recognized on the CAN bus. The value of this timer during the ACK slot is captured into the TSTP register of a message buffer after a successful transmission or reception of a message. Figure 51 shows a simplified block diagram of the Time Stamp counter.

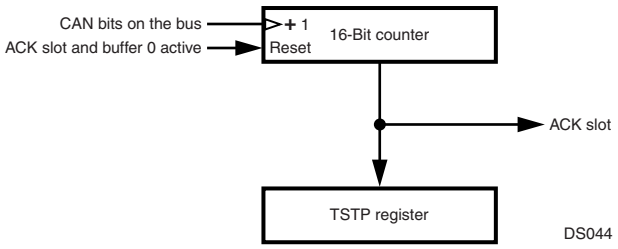

Figure 51. Time Stamp Counter

The timer can be synchronized over the CAN network by receiving or transmitting a message to or from buffer 0. In this case, the TSTP register of buffer 0 captures the current CTMR value during the ACK slot of a message (as above), and then the CTMR is reset to 0000b. Synchronization can be enabled or disabled using the CGCR.TSTPEN bit.

16.9 MEMORY ORGANIZATION

The CAN module occupies 144 words in the memory address space. This space is organized as 15 banks of 8 words per bank (plus one reserved bank) for the message buffers and 14 words (plus 2 reserved words) for control and status.

16.9.1 CPU Access to CAN Registers/Memory

All memory locations occupied by the message buffers are shared by the CPU and CAN module (dual-ported RAM). The CAN module and the CPU normally have single-cycle access to this memory. However, if an access contention occurs, the access to the memory is blocked every cycle until the contention is resolved. This internal access arbitration is transparent to software.

Both word and byte access to the buffer RAM are allowed. If a buffer is busy during the reception of an object (copy process from the hidden receive buffer) or is scheduled for transmission, the CPU has no write access to the data contents of the buffer. Write to the status/control byte and read access to the whole buffer is always enabled.

All configuration and status registers can either be accessed by the CAN module or the CPU only. These registers provide single-cycle word and byte access without any potential wait state.

All register descriptions within the next sections have the following layout:

15	0
Bit/Field Names	
Reset Value	
CPU Access (R = read only, W = write only, R/W = read/write)	

16.9.2 Message Buffer Organization

The message buffers are the communication interfaces between CAN and the CPU for the transmission and the reception of CAN frames. There are 15 message buffers located at fixed addresses in the RAM location. As shown in Table 40, each buffer consists of two words reserved for the identifiers, 4 words reserved for up to eight CAN data bytes, one word reserved for the time stamp, and one word for data length code, transmit priority code, and the buffer status codes.

Table 40 Message Buffer Map

Address	Buffer Register	15	14	13	12	11	10	9	8	7	6	5	4	3	2	1	0
0E F0XEh	ID1	XI[28:18]/ID[10:0]											SRR /RTR	IDE	XI[17:15]		
0E F0XCh	ID0	XI[14:0]															RTR
0E F0XAh	DATA0	Data1[7:0]								Data2[7:0]							
0E F0X8h	DATA1	Data3[7:0]								Data4[7:0]							
0E F0X6h	DATA2	Data5[7:0]								Data6[7:0]							
0E F0X4h	DATA3	Data7[7:0]								Data8[7:0]							
0E F0X2h	TSTP	TSTP[15:0]															
0E F0X0h	CNSTAT	DLC				Reserved				PRI				ST			

16.10 CAN CONTROLLER REGISTERS

Table 41 lists the CAN module registers.

Table 41 CAN Controller Registers

Name	Address	Description
CNSTAT	See Table 40.	CAN Buffer Status/ Control Register
CGCR	0E F100h	CAN Global Configuration Register
CTIM	0E F102h	CAN Timing Register
GMSKX	0E F104h	Global Mask Register
GMSKB	0E F106h	Global Mask Register
BMSKX	0E F108h	Basic Mask Register
BMSKB	0E F10Ah	Basic Mask Register
CIEN	0E F10Ch	CAN Interrupt Enable Register
CIPND	0E F10Eh	CAN Interrupt Pending Register
CICLR	0E F110h	CAN Interrupt Clear Register
CICEN	0E F112h	CAN Interrupt Code Enable Register
CSTPND	0E F114h	CAN Status Pending Register
CANEC	0E F116h	CAN Error Counter Register
CEDIAG	0E F118h	CAN Error Diagnostic Register
CTMR	0E F11Ah	CAN Timer Register

16.10.1 Buffer Status/Control Register (CNSTAT)

The buffer status (ST), the buffer priority (PRI), and the data length code (DLC) are controlled by manipulating the contents of the Buffer Status/Control Register (CNSTAT). The CPU and CAN module have access to this register.

15 – 12	11 – 8	7 – 4	3 – 0
DLC	Reserved	PRI	ST
0			
R/W			

ST — The Buffer Status field contains the status information of the buffer as shown in Table 42. This field can be modified by the CAN module. The ST0 bits acts as a buffer busy indication. When the BUSY bit is set, any write access to the buffer is disabled with the exception of the lower byte of the CNSTAT register. The CAN module sets this bit if the buffer data is currently copied from the hidden buffer or if a message is scheduled for transmission or is currently transmitting. The CAN module always clears this bit on a status update.

Table 42 Buffer Status Section of the CNSTAT Register

ST3 (DIR)	ST2	ST1	ST0 (BUSY)	Buffer Status
0	0	0	0	RX_NOT_ACTIVE
0	0	0	1	Reserved for RX_BUSY. (This condition indicates that software wrote RX_NOT_ACTIVE to a buffer when the data copy process is still active.)
0	0	1	0	RX_READY
0	0	1	1	RX_BUSY0 (Indicates data is being copied for the first time RX_READY → RX_BUSY0.)
0	1	0	0	RX_FULL
0	1	0	1	RX_BUSY1 (Indicates data is being copied for the second time RX_FULL → RX_BUSY1.)
0	1	1	0	RX_OVERRUN
0	1	1	1	RX_BUSY2 (Indicates data is being copied for the third or subsequent times RX_OVERRUN → RX_BUSY2.)
1	0	0	0	TX_NOT_ACTIVE
1	0	0	1	Reserved for TX_BUSY. (This state indicates that software wrote TX_NOT_ACTIVE to a transmit buffer which is scheduled for transmission or is currently transmitting.)
1	1	0	0	TX_ONCE
1	1	0	1	TX_BUSY0 (Indicates that a buffer is scheduled for transmission or is actively transmitting; it can be due to one of two cases: a message is pending for transmission or is currently transmitting, or an automated answer is pending for transmission or is currently transmitting.)
1	0	1	0	TX_RTR (Automatic response to a remote frame.)
1	0	1	1	Reserved for TX_BUSY1. (This condition does not occur.)
1	1	1	0	TX_ONCE_RTR (Changes to TX_RTR after transmission.)
1	1	1	1	TX_BUSY2 (Indicates that a buffer is scheduled for transmission or is actively transmitting; it can be due to one of two cases: a message is pending for transmission or is currently transmitting, or an automated answer is pending for transmission or is currently transmitting.)

PRI — The Transmit Priority Code field holds the software-defined transmit priority code for the message buffer.

DLC — The Data Length Code field determines the number of data bytes within a received/transmitted frame. For transmission, these bits need to be set according to the number of data bytes to be transmitted. For reception, these bits indicate the number of valid received data bytes available in the message buffer. Table 43 shows the possible bit combinations for DLC3:0 for data lengths from 0 to 8 bytes.

Table 43 Data Length Coding

DLC	Number of Data Bytes
0000	0
0001	1
0010	2
0011	3
0100	4
0101	5
0110	6
0111	7
1000	8

Note: The maximum number of data bytes received/transmitted is 8, even if the DLC field is set to a value greater than 8. Therefore, if the data length code is greater or equal to eight bytes, the DLC field is ignored.

16.10.2 Storage of Standard Messages

During the processing of standard frames, the Extended-Identifier (IDE) bit is clear. The ID1[3:0] and ID0[15:0] bits are “don’t care” bits. A standard frame with eight data bytes is shown in Table 44.

IDE — The Identifier Extension bit determines whether the message is a standard frame or an extended frame.
- 0 – Message is a standard frame using 11 identifier bits.
- 1 – Message is an extended frame.

RTR — The Remote Transmission Request bit indicates whether the message is a data frame or a remote frame.
- 0 – Message is a data frame.
- 1 – Message is a remote frame.

ID — The ID field is used for the 11 standard frame identifier bits.

Table 44 Standard Frame with 8 Data Bytes

Address	Buffer Register	15	14	13	12	11	10	9	8	7	6	5	4	3	2	1	0
0E F0XEh	ID1	ID[10:0]											RTR	IDE	Don’t Care		
0E F0XCh	ID0	Don’t Care															
0E F0XAh	DATA0	Data1[7:0]								Data2[7:0]							
0E F0X8h	DATA1	Data3[7:0]								Data4[7:0]							
0E F0X6h	DATA2	Data5[7:0]								Data6[7:0]							
0E F0X4h	DATA3	Data7[7:0]								Data8[7:0]							
0E F0X2h	TSTP	TSTP[15:0]															
0E F0X0h	CNSTAT	DLC				Reserved				PRI				ST			

16.10.3 Storage of Messages with Less Than 8 Data Bytes

The data bytes that are not used for data transfer are “don’t cares”. If the object is transmitted, the data within these bytes will be ignored. If the object is received, the data within these bytes will be overwritten with invalid data.

16.10.4 Storage of Extended Messages

If the IDE bit is set, the buffer handles extended frames. The storage of the extended ID follows the descriptions in Table 45. The SRR bit is at the bit position of the RTR bit for standard frame and needs to be transmitted as 1.

Table 45 Extended Messages with 8 Data Bytes

Address	Buffer Register	15	14	13	12	11	10	9	8	7	6	5	4	3	2	1	0
0E F0XEh	ID1	ID[28:18]											SRR	IDE	ID17:15]		
0E F0XCh	ID0	ID[14:0]															RTR
0E F0XAh	DATA0	Data1[7:0]								Data2[7:0]							
0E F0X8h	DATA1	Data3[7:0]								Data4[7:0]							
0E F0X6h	DATA2	Data5[7:0]								Data6[7:0]							
0E F0X4h	DATA3	Data7[7:0]								Data8[7:0]							
0E F0X2h	TSTP	TSTP[15:0]															
0E F0X0h	CNSTAT	DLC				Reserved				PRI				ST			

SRR — The Substitute Remote Request bit replaces the RTR bit used in standard frames at this bit position. The SRR bit needs to be set by software if the buffer is configured to transmit a message with an extended identifier. It will be received as monitored on the CAN bus.

IDE — The Identifier Extension bit determines whether the message is a standard frame or an extended frame.
- 0 – Message is a standard frame using 11 identifier bits.
- 1 – Message is an extended frame.

RTR — The Remote Transmission Request bit indicates whether the message is a data frame or a remote frame.
- 0 – Message is a data frame.
- 1 – Message is a remote frame.

ID — The ID field is used to build the 29-bit identifier of an extended frame.

16.10.5 Storage of Remote Messages

During remote frame transfer, the buffer registers DATA0–DATA3 are “don’t cares”. If a remote frame is transmitted, the contents of these registers are ignored. If a remote frame is received, the contents of these registers will be overwritten with invalid data. The structure of a message buffer set up for a remote frame with extended identifier is shown in Table 46.

Table 46 Extended Remote Frame

Address	Buffer Register	15	14	13	12	11	10	9	8	7	6	5	4	3	2	1	0
0E F0XEh	ID1	ID[28:18]											SRR	IDE	ID17:15]		
0E F0XCh	ID0	ID[14:0]															RTR
0E F0XAh	DATA0	Don’t Care															
0E F0X8h	DATA1																
0E F0X6h	DATA2																
0E F0X4h	DATA3																
0E F0X2h	TSTP	TSTP															
0E F0X0h	CNSTAT	DLC				Reserved				PRI				ST			

SRR — The Substitute Remote Request bit replaces the RTR bit used in standard frames at this bit position. The SRR bit needs to be set by software.

IDE — The Identifier Extension bit determines whether the message is a standard frame or an extended frame.
- 0 – Message is a standard frame using 11 identifier bits.
- 1 – Message is an extended frame.

RTR — The Remote Transmission Request bit indicates whether the message is a data frame or a remote frame.
- 0 – Message is a data frame.
- 1 – Message is a remote frame.

ID — The ID field is used to build the 29-bit identifier of an extended frame. The ID[28:18] field is used for the 11 standard frame identifier bits.

16.10.6 CAN Global Configuration Register (CGCR)

The CAN Global Configuration Register (CGCR) is a 16-bit wide register used to:

- Enable/disable the CAN module.
- Configure the BUFFLOCK function for the message buffer 0..14.
- Enable/disable the time stamp synchronization.
- Set the logic levels of the CAN Input/Output pins, CANRX and CANTX.
- Choose the data storage direction (DDIR).
- Select the error interrupt type (EIT).
- Enable/disable diagnostic functions.

7	6	5	4	3	2	1	0
IGNACK	LO	DDIR	TST PEN	BUFF LOCK	CRX	CTX	CANEN
0							
R/W							

15	12	11	10	9	8
Reserved		EIT	DIAGEN	INTERNAL	LOOPBACK
0					
R/W					

CANEN The CAN Enable bit enables/disables the CAN module. When the CAN module is disabled, all internal states and the TEC and REC counter registers are cleared. In addition the CAN module clock is disabled. All CAN module control registers and the contents of the object memory are left unchanged. Software must make sure that no message is pending for transmission before the CAN module is disabled.
0 – CAN module is disabled.
1 – CAN module is enabled.

CTX The Control Transmit bit configures the logic level of the CAN transmit pin CANTX.
0 – Dominant state is 0; recessive state is 1.
1 – Dominant state is 1; recessive state is 0.

CRX The Control Receive bit configures the logic level of the CAN receive pin CANRX.
0 – Dominant state is 0; recessive state is 1.
1 – Dominant state is 1; recessive state is 0.

BUFFLOCK The Buffer Lock bit configures the buffer lock function. If this feature is enabled, a buffer will be locked upon a successful frame reception. The buffer will be unlocked again by writing RX_READY in the buffer status register, i.e., after reading data.
0 – Lock function is disabled for all buffers.
1 – Lock function is enabled for all buffers.

TSTPEN The Time Sync Enable bit enables or disables the time stamp synchronization function of the CAN module.
0 – Time synchronization disabled. The Time Stamp counter value is not reset upon reception or transmission of a message to/from buffer 0.
1 – Time synchronization enabled. The Time Stamp counter value is reset upon reception or transmission of a message to/from buffer 0.

DDIR The Data Direction bit selects the direction the data bytes are transmitted and received. The CAN module transmits and receives the CAN Data1 byte first and the Data8 byte last (Data1, Data2,...,Data7, Data8). If the DDIR bit is clear, the data contents of a received message is stored with the first byte at the highest data address and the last data at the lowest data address (see Figure 52). The same applies for transmitted data.
0 – First byte at the highest address, subsequent bytes at lower addresses.
1 – First byte at the lowest address, subsequent bytes at higher addresses.

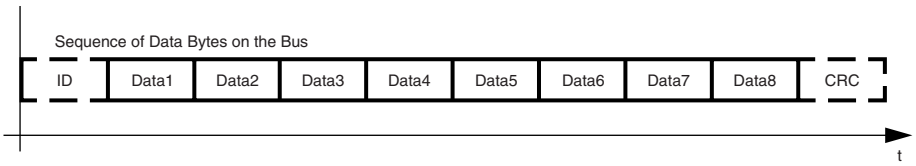

Storage of Data Bytes in the Buffer Memory

ADDR Offset	Data Bytes	
$0A_{16}$	Data1	Data2
08_{16}	Data3	Data4
06_{16}	Data5	Data6
04_{16}	Data7	Data8

DS045

Figure 52. Data Direction Bit Clear

Setting the DDIR bit will cause the direction of the data storage to be reversed — the last byte received is stored at the highest address and the first byte is stored at the lowest address, as shown in Figure 53.

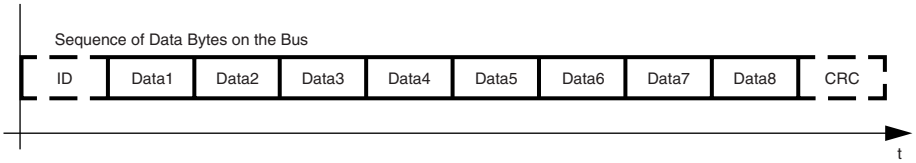

Storage of Data Bytes in the Buffer Memory

ADDR Offset	Data Bytes	
$0A_{16}$	Data8	Data7
08_{16}	Data6	Data5
06_{16}	Data4	Data3
04_{16}	Data2	Data1

DS046

Figure 53. Data Direction Bit Set

LO — The Listen Only bit can be used to configure the CAN interface to behave only as a receiver. This means:

- Cannot transmit any message.
- Cannot send a dominant ACK bit.
- When errors are detected on the bus, the CAN module will behave as in the error passive mode.

Using this listen only function, the CAN interface can be adjusted for connecting to an operating network with unknown bus speed.

0 – Transmit/receive mode.
1 – Listen-only mode.

IGNACK — When the Ignore Acknowledge bit is set, the CAN module does not expect to receive a dominant ACK bit to indicate the validity of a transmitted message. It will not send an error frame when the transmitted frame is not acknowledged by any other CAN node. This feature can be used in conjunction with the LOOPBACK bit for stand-alone tests outside of a CAN network.

0 – Normal mode.
1 – The CAN module does not expect to receive a dominant ACK bit to indicate the validity of a transmitted message.

LOOPBACK — When the Loopback bit is set, all messages sent by the CAN module can also be received by a CAN module buffer with a matching buffer ID. However, the CAN module does not acknowledge a message sent by itself. Therefore, the CAN module will send an error frame when no other device connected to the bus has acknowledged the message.

0 – No loopback.
1 – Loopback enabled.

INTERNAL If the Internal function is enabled, the CANTX and CANRX pins of the CAN module are internally connected to each other. This feature can be used in conjunction with the LOOPBACK mode. This means that the CAN module can receive its own sent messages without connecting an external transceiver chip to the CANTX and CANRX pins; it allows software to run real stand-alone tests without any peripheral devices.
0 – Normal mode.
1 – Internal mode.

DIAGEN The Diagnostic Enable bit globally enables or disables the special diagnostic features of the CAN module. This includes the following functions:
- LO (Listen Only).
- IGNACK (Ignore Acknowledge).
- LOOPBACK (Loopback).
- INTERNAL (Internal Loopback).
- Write access to hidden receive buffer.

0 – Normal mode.
1 – Diagnostic features enabled.

EIT The Error Interrupt Type bit configures when the Error Interrupt Pending Bit (CIPND.EIPND) is set and an error interrupt is generated if enabled by the Error Interrupt Enable (CIEN.EIEN).
0 – The EIPND bit is set on every error on the CAN bus.
1 – The EIPND bit is set only if the error state (CSTPND.NS) changes as a result of incrementing either the receive or transmit error counter.

16.10.7 CAN Timing Register (CTIM)

The Can Timing Register (CTIM) defines the configuration of the Bit Time Logic (BTL).

15 – 9	8 – 7	6 – 3	2 – 0
PSC	SJW	TSEG1	TSEG2
0			
R/W			

PSC The Prescaler Configuration field specifies the CAN prescaler. The settings are shown in Table 47

Table 47 CAN Prescaler Settings

PSC6:0	Prescaler
000000	2
000001	3
000010	4
000011	5
000100	6
:	:
1111101	127
1111110	128
1111111	128

SJW The Synchronization Jump Width field specifies the Synchronization Jump Width, which can be programmed between 1 and 4 time quanta (see Table 48).

Table 48 SJW Settings

SJW	Synchronization Jump Width (SJW)
00	1 time quantum
01	2 time quanta
10	3 time quanta
11	4 time quanta

Note: The settings of SJW must be configured to be smaller or equal to TSEG1 and TSEG2

TSEG1 The Time Segment 1 field configures the length of the Time Segment 1 (TSEG1). It is not recommended to configure the time segment 1 to be smaller than 2 time quanta. (see Table 49).

Table 49 Time Segment 1 Settings

TSEG1[3:0]	Length of Time (TSEG1)
0000	Not recommended
0001	2 time quanta
0010	3 time quanta
0011	4 time quanta
0100	5 time quanta
0101	6 time quanta
0110	7 time quanta
0111	8 time quanta
1000	9 time quanta
1001	10 time quanta
1010	11 time quanta
1011	12 time quanta
1100	13 time quanta
1101	14 time quanta
1110	15 time quanta
1111	16 time quanta

TSEG2 The Time Segment 2 field specifies the number of time quanta (tq) for phase segment 2 (see Table 50).

Table 50 Time Segment 2 Settings

TSEG2	Length of TSEG2
000	1 time quantum
001	2 time quanta
010	3 time quanta
011	4 time quanta
100	5 time quanta
101	6 time quanta
110	7 time quanta
111	8 time quanta

16.10.8 Global Mask Register (GMSKB/GMSKX)

The GMSKB and GMSKX registers allow software to globally mask, or “don’t care” the incoming extended/standard identifier bits, RTR/XRTR and IDE. Throughout this document, the GMSKB and GMSKX 16-bit registers are referenced as a 32-bit register GMSK.

The following are the bits for the GMSKB register.

15 – 5	4	3	2 – 0
GM[28:18]	RTR	IDE	GM[17:15]
0			
R/W			

The following are the bits for the GMSKX register.

15 – 1	0
GM[14:0]	XRTR
0	
R/W	

For all GMSKB and GMSKX register bits, the following applies:

0 – The incoming identifier bit must match the corresponding bit in the message buffer identifier register.

1 – Accept 1 or 0 (“don’t care”) in the incoming ID bit independent from the corresponding bit in the message buffer ID registers. The corresponding ID bit in the message buffer will be overwritten by the incoming identifier bits.

When an extended frame is received from the CAN bus, all GMSK bits GM[28:0], IDE, RTR, and XRTR are used to mask the incoming message. In this case, the RTR bit in the GMSK register corresponds to the SRR bit in the message. The XRTR bit in the GMSK register corresponds to the RTR bit in the message.

During the reception of standard frames only the GMSK bits GM[28:18], RTR, and IDE are used. In this case, the GM[28:18] bits in the GMSK register correspond to the ID[10:0] bits in the message.

Global Mask	GM[28:18]	RTR	IDE	GM[17:0]	XRTR
Standard Frame	ID[10:0]	RTR	IDE	Unused	
Extended Frame	ID[28:18]	SRR	IDE	ID[17:0]	RTR

16.10.9 Basic Mask Register (BMSKB/BMSKX)

The BMSKB and BMSKX registers allow masking the buffer 14, or "don't care" the incoming extended/standard identifier bits, RTR/XRTR, and IDE. Throughout this document, the two 16-bit registers BMSKB and BMSKX are referenced to as a 32-bit register BMSK.

The following are the bits for the BMSKB register.

15 – 5	4	3	2 – 0
BM[28:18]	RTR	IDE	BM[17:15]
0			
R/W			

The following are the bits for the BMSKX register.

15 – 1	0
BM[14:0]	XRTR
0	
R/W	

For all BMSKB and BMSKX register bits the following applies:

0 – The incoming identifier bit must match the corresponding bit in the message buffer identifier register.

1 – Accept 1 or 0 ("don't care") in the incoming ID bit independent from the corresponding bit in the message buffer ID registers. The corresponding ID bit in the message buffer will be overwritten by the incoming identifier bits.

When an extended frame is received from the CAN bus, all BMSK bits BM[28:0], IDE, RTR, and XRTR are used to mask the incoming message. In this case, the RTR bit in the BMSK register corresponds to the SRR bit in the message. The XRTR bit in the BMSK register corresponds to the RTR bit in the message.

During the reception of standard frames, only the BMSK bits BM[28:18], RTR, and IDE are used. In this case, the BM[28:18] bits in the BMSK register correspond to the ID[10:0] bits in the message.

Basic Mask	BM[28:18]	RTR	IDE	BM[17:0]	XRTR
Standard Frame	ID[10:0]	RTR	IDE	Unused	
Extended Frame	ID[28:18]	SRR	IDE	ID[17:0]	RTR

16.10.10 CAN Interrupt Enable Register (CIEN)

The CAN Interrupt Enable (CIEN) register enables the transmit/receive interrupts of the message buffers 0 through 14 as well as the CAN Error Interrupt.

15	14 – 0
EIEN	IEN
0	
R/W	

EIEN — The Error Interrupt Enable bit allows the CAN module to interrupt the CPU if any kind of CAN receive/transmit errors are detected. This causes any error status change in the error counter registers REC/TEC is able to generate an error interrupt.

0 – The error interrupt is disabled and no error interrupt will be generated.

1 – The error interrupt is enabled and a change in REC/TEC will cause an interrupt to be generated.

IEN — The Buffer Interrupt Enable bits allow software to enable/disable the interrupt source for the corresponding message buffer. For example, IEN14 controls interrupts from buffer14, and IEN0 controls interrupts from buffer0.

0 – Buffer as interrupt source disabled.

1 – Buffer as interrupt source enabled.

16.10.11 CAN Interrupt Pending Register (CIPND)

The CIPND register indicates any CAN Receive/Transmit Interrupt Requests caused by the message buffers 0..14 and CAN error occurrences.

15	14 – 0
EIPND	IPND
0	
R	

EIPND — The Error Interrupt Pending field indicates the status change of TEC/REC and will execute an error interrupt if the EIEN bit is set. Software has the responsibility to clear the EIPND bit using the CICLR register.

0 – CAN status is not changed.

1 – CAN status is changed.

IPND — The Buffer Interrupt Pending bits are set by the CAN module following a successful transmission or reception of a message to or from the corresponding message buffer. For example, IPND14 corresponds to buffer14, and IPND0 corresponds to buffer0.

0 – No interrupt pending for the corresponding message buffer.

1 – Message buffer has generated an interrupt.

16.10.12 CAN Interrupt Clear Register (CICLR)

The CICLR register bits individually clear CAN interrupt pending flags caused by the message buffers and from the Error Management Logic. Do not modify this register with instructions that access the register as a read-modify-write operand, such as the bit manipulation instructions.

15	14 … 0
EICLR	ICLR
0	
W	

EICLR — The Error Interrupt Clear bit is used to clear the EIPND bit.
- 0 – The EIPND bit is unaffected by writing 0.
- 1 – The EIPND bit is cleared by writing 1.

ICLR — The Buffer Interrupt Clear bits are used to clear the IPND bits.
- 0 – The corresponding IPND bit is unaffected by writing 0.
- 0 – The corresponding IPND bit is cleared by writing 1.

16.10.13 CAN Interrupt Code Enable Register (CICEN)

The CICEN register controls whether the interrupt pending flag in the CIPND register is translated into the Interrupt Code field of the CSTPND register. All interrupt requests, CAN error, and message buffer interrupts can be enabled/disabled separately for the interrupt code indication field.

15	14 … 0
EICEN	ICEN
0	
R/W	

EICEN — The Error Interrupt Code Enable bit controls encoding for error interrupts.
- 0 – Error interrupt pending is not indicated in the interrupt code.
- 1 – Error interrupt pending is indicated in the interrupt code.

ICEN — The Buffer Interrupt Code Enable bits control encoding for message buffer interrupts.
- 0 – Message buffer interrupt pending is not indicated in the interrupt code.
- 1 – Message buffer interrupt pending is indicated in the interrupt code.

16.10.14 CAN Status Pending Register (CSTPND)

The CSTPND register holds the status of the CAN Node and the Interrupt Code.

15 … 8	7 … 5	4	3 … 0
Reserved	NS	IRQ	IST
0			
R			

NS — The CAN Node Status field indicates the status of the CAN node as shown in Table 51.

Table 51 CAN Node Status

NS	Node Status
000	Not Active
010	Error Active
011	Error Warning Level
10X	Error Passive
11X	Bus Off

IRQ/IST — The IRQ bit and IST field indicate the interrupt source of the highest priority interrupt currently pending and enabled in the CICEN register. Table 52 shows the several interrupt codes when the encoding for all interrupt sources is enabled (CICEN = FFFFh).

Table 52 Highest Priority Interrupt Code

IRQ	IST3:0	CAN Interrupt Request
0	0000	No interrupt request
1	0000	Error interrupt
1	0001	Buffer 0
1	0010	Buffer 1
1	0011	Buffer 2
1	0100	Buffer 3
1	0101	Buffer 4
1	0110	Buffer 5
1	0111	Buffer 6
1	1000	Buffer 7
1	1001	Buffer 8
1	1010	Buffer 9
1	1011	Buffer 10
1	1100	Buffer 11
1	1101	Buffer 12
1	1110	Buffer 13
1	1111	Buffer 14

16.10.15 CAN Error Counter Register (CANEC)

The CANEC register reports the values of the CAN Receive Error Counter and the CAN Transmit Error Counter.

15 … 8	7 … 0
REC	TEC
0	
R	

REC — The CAN Receive Error Counter field reports the value of the receive error counter.

TEC — The CAN Transmit Error Counter field reports the value of the transmit error counter.

16.10.16 CAN Error Diagnostic Register (CEDIAG)

The CEDIAG register reports information about the last detected error. The CAN module identifies the field within the CAN frame format in which the error occurred, and it identifies the bit number of the erroneous bit within the frame field. The CPU bus master has read-only access to this register, and all bits are cleared on reset.

15	14	13	12	11	10	9 … 4	3 … 0
Res.	DRIVE	MON	CRC	STUFF	TXE	EBID	EFID
0							
R							

EFID — The Error Field Identifier field identifies the frame field in which the last error occurred. The encoding of the frame fields is shown in Table 53.

Table 53 Error Field Identifier

EFID3:0	Field
0000	ERROR
0001	ERROR DEL
0010	ERROR ECHO
0011	BUS IDLE
0100	ACK
0101	EOF
0110	INTERMISSION
0111	SUSPEND TRANSMISSION
1000	SOF
1001	ARBITRATION
1010	IDE
1011	EXTENDED ARBITRATION
1100	R1/R0
1101	DLC
1110	DATA
1111	CRC

EBID — The Error Bit Identifier field reports the bit position of the incorrect bit within the erroneous frame field. The bit number starts with the value equal to the respective frame field length minus one at the beginning of each field and is decremented with each CAN bit. Figure 54 shows an example on how the EBID is calculated.

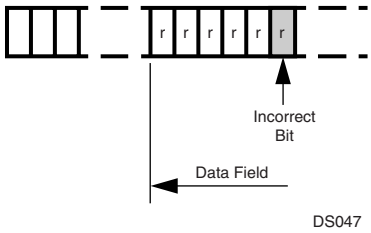

Figure 54. EBID Example

For example, assume the EFID field shows 1110b and the EBID field shows 111001b. This means the faulty field was the data field. To calculate the bit position of the error, the DLC of the message needs to be known. For example, for a DLC of 8 data bytes, the bit counter starts with the value: (8 × 8) - 1 = 63; so when EBID[5:0] = 111001b = 57, then the bit number was 63 - 57 = 6.

TXE — The Transmit Error bit indicates whether the CAN module was an active transmitter at the time the error occurred.

0 – The CAN module was a receiver at the time the error occurred.

1 – The CAN module was an active transmitter at the time the error occurred.

STUFF — The Stuff Error bit indicates whether the bit stuffing rule was violated at the time the error occurred. Note that certain bit fields do not use bit stuffing and therefore this bit may be ignored for those fields.

0 – No bit stuffing error.

1 – The bit stuffing rule was violated at the time the error occurred.

CRC — The CRC Error bit indicates whether the CRC is invalid. This bit should only be checked if the EFID field shows the code of the ACK field.

0 – No CRC error occurred.

1 – CRC error occurred.

MON — The Monitor bit shows the bus value on the CANRX pin as sampled by the CAN module at the time of the error.

DRIVE The Drive bit shows the output value on the CANTX pin at the time of the error. Note that a receiver will not drive the bus except during ACK and during an active error flag.

16.10.17 CAN Timer Register (CTMR)

The CTMR register reports the current value of the Time Stamp Counter as described in Section 16.8.

15	0
CTMR15:0	
0	
R	

The CTMR register is a free running 16-bit counter. It contains the number of CAN bits recognized by the CAN module since the register has been cleared. The counter starts to increment from the value 0000b after a hardware reset. If the Timer Stamp Enable bit (TSTPEN) in the CAN global configuration register (CGCR) is set, the counter will also be cleared on a message transfer of the message buffer 0.

The contents of CTMR are captured into the Time Stamp register of the message buffer after successfully sending or receiving a frame, as described in "Time Stamp Counter" on page 93.

16.11 SYSTEM START-UP AND MULTI-INPUT WAKE-UP

After system start-up, all CAN-related registers are in their reset state. The CAN module can be enabled after all configuration registers are set to their desired value. The following initial settings must be made:

- Configure the CAN Timing register (CTIM). See "Bit Time Logic" on page 84.
- Configure every buffer to its function as receive/transmit. See "Buffer Status/Control Register (CNSTAT)" on page 95.
- Set the acceptance filtering masks. See "Acceptance Filtering" on page 86.
- Enable the CAN interface. See "CAN Global Configuration Register (CGCR)" on page 100.

Before disabling the CAN module, software must make sure that no transmission is still pending.

Note: Activity on the CAN bus can wake up the device from a reduced-power mode by selecting the CANRX pin as an input to the Multi-Input Wake-Up module. In this case, the CAN module must not be disabled before entering the reduced-power mode. Disabling the CAN module also disables the CANRX pin. As an alternative, the CANRX pin can be connected to any other input pin of the Multi-Input Wake-Up module. This input channel must then be configured to trigger a wake-up event on a falling edge (if a dominant bit is represented by a low level). In this case, the CAN module can be disabled before entering the reduced-power mode. After waking up, software must enable the CAN module again. All configuration and buffer registers still contain the same data they held before the reduced-power mode was entered.

16.11.1 External Connection

The CAN module uses the CANTX and CANRX pins to connect to the physical layer of the CAN interface. They provide the functionality described in Table 54.

Table 54 External CAN Pins

Signal Name	Type	Description
CANTX	Output	Transmit data to the CAN bus
CANRX	Input	Receive data from the CAN bus

The logic levels are configurable by the CTX and CRX bits of the Global Configuration Register CGCR (see "CAN Global Configuration Register (CGCR)" on page 100).

16.11.2 Transceiver Connection

An external transceiver chip must be connected between the CAN block and the bus. It establishes a bus connection in differential mode and provides the driver and protection requirements. Figure 55 shows a possible ISO-High-Speed configuration.

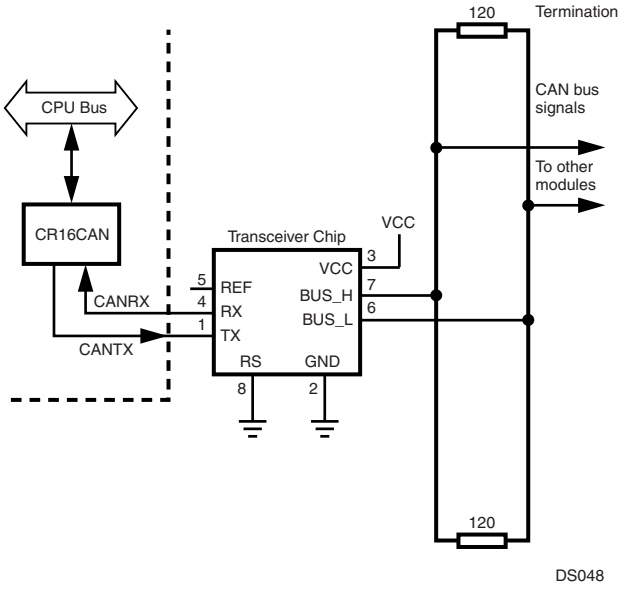

Figure 55. External Transceiver

16.11.3 Timing Requirements

Processing messages and updating message buffers require a certain number of clock cycles, as shown in Table 55. These requirements may lead to some restrictions regarding the Bit Time Logic settings and the overall CAN performance which are described below in more detail. Wait cycles need to be added to the cycle count for CPU access to the object memory as described in CPU Access to CAN Registers/Memory on page 94. The number of occurrences per frame is dependent on the number of matching identifiers.

Table 55 CAN Module Internal Timing

Task	Cycle Count	Occurrence/ Frame
Copy hidden buffer to receive message buffer	17	0–1
Update status from TX_RTR to TX_ONCE_RTR	3	0–15
Schedule a message for transmission	2	0–1

The critical path derives from receiving a remote frame, which triggers the transmission of one or more data frames. There are a minimum of four bit times in-between two consecutive frames. These bit times start at the validation point of received frame (reception of 6th EOF bit) and end at the earliest possible transmission start of the next frame, which is after the third intermission bit at 100% burst bus load.

These four bit times have to be set in perspective with the timing requirements of the CAN module.

The minimum duration of the four CAN bit times is determined by the following Bit Time Logic settings:

PSC = PSCmin = 2

TSEG1 = TSEG1min = 2

TSEG2 = TSEG2min = 1

Bit time = Sync + Time Segment 1 + Time Segment 2
= (1 + 2 + 1) tq = 4 tq
= (4 tq × PSC) clock cycles
= (4 tq × 2) clock cycles = 8 clock cycles

For these minimum BTL settings, four CAN bit times take 32 clock cycles.

The following is an example that assumes typical case:

- Minimum BTL settings
- Reception and copy of a remote frame
- Update of one buffer from TX_RTR
- Schedule of one buffer from transmit

As outlined in Table 55, the copy process, update, and scheduling the next transmission gives a total of 17 + 3 + 2 = 22 clock cycles. Therefore under these conditions there is no timing restriction.

The following example assumes the worst case:

- Minimum BTL settings
- Reception and copy of a remote frame
- Update of the 14 remaining buffers from TX_RTR
- Schedule of one buffer for transmit

All these actions in total require 17 + (14 × 3) + 2 = 61 clock cycles to be executed by the CAN module. This leads to the limitation of the Bit Time Logic of 61 / 4 = 15.25 clock cycles per CAN bit as a minimum, resulting in the minimum clock frequencies listed below. (The frequency depends on the desired baud rate and assumes the worst case scenario can occur in the application.)

Table 56 gives examples for the minimum clock frequency in order to ensure proper functionality at various CAN bus speeds.

Table 56 Minimum Clock Frequency Requirements

Baud Rate	Minimum Clock Frequency
1 Mbit/sec	15.25 MHz
500 kbit/sec	7.625 MHz
250 kbit/sec	3.81 MHz

16.11.4 Bit Time Logic Calculation Examples

The calculation of the CAN bus clocks using CKI = 16 MHz is shown in the following examples. The desired baud rate for both examples is 1 Mbit/s.

Example 1

PSC = PSC[5:0] + 2 = 0 + 2 = 2

TSEG1 = TSEG1[3:0] + 1 = 3 + 1 = 4

TSEG2 = TSEG2[2:0] + 1 = 2 + 1 = 3

SJW = TSEG2 = 3

- Sample point positioned at 62.5% of bit time
- Bit time = 125 ns × (1 + 4 + 3 ± 3) = (1 ± 0.375) µs
- Bus Clock = 16 MHz / (2 × (1 + 4 + 3)) = 1 Mbit/s (nominal)

Example 2

PSC = PSC[5:0] + 1 = 2 + 2 = 4

TSEG1 = TSEG1[3:0] + 1 = 1 + 1 = 2

TSEG2 = TSEG2[2:0] + 1 = 0 + 1 = 1

SJW = TSEG2 = 1

- Sample point positioned at 75% of bit time
- Bit time = 250 ns × (1 + 2 + 1 ± 1) = (1 ± 0.25) µs
- Bus Clock = 16 MHz / (2 × (1 + 4 + 3)) = 1Mbit/s (nominal)

16.11.5 Acceptance Filter Considerations

The CAN module provides two acceptance filter masks GMSK and BMSK, as described in “Acceptance Filtering” on page 86, “Global Mask Register (GMSKB/GMSKX)” on page 103, and “Basic Mask Register (BMSKB/BMSKX)” on page 104. These masks allow filtering of up to 32 bits of the message object, which includes the standard identifier, the extended identifier, and the frame control bits RTR, SRR, and IDE.

16.11.6 Remote Frames

Remote frames can be automatically processed by the CAN module. However, to fully enable this feature, the RTR/XRTR bits (for both standard and extended frames) within the BMSK and/or GMSK register need to be set to “don’t care”. This is because a remote frame with the RTR bit set should trigger the transmission of a data frame with the RTR bit clear and therefore the ID bits of the received message need to pass through the acceptance filter. The same applies to transmitting remote frames and switching to receive the corresponding data frames.

16.12 USAGE HINT

Under certain conditions, the CAN module receives a frame sent by itself, even though the loopback feature is disabled. Two conditions must be true to cause this malfunction:

- A transmit buffer and at least one receive buffer are configured with the same identifier. Assume this identifier is called ID_RX_TX. With regard to the receive buffer, this means that the buffer identifier and the corresponding filter masks are set up in a way that the buffer is able to receive frames with the identifier ID_RX_TX.
- The following sequence of events occurs:
  1. A message with the identifier ID_RX_TX from another CAN node is received into the receive buffer.
  2. A message with the identifier ID_RX_TX is sent by the CAN module immediately after the reception took place.

When these conditions occur, the frame sent by the CAN module will be copied into the next receive buffer available for the identifier ID_RX_TX.

If a frame with an identifier different to ID_RX_TX is sent or received in between events 1 and 2, the problem does not occur.

17.0 Advanced Audio Interface

The Advanced Audio Interface (AAI) provides a serial synchronous, full duplex interface to codecs and similar serial devices. The transmit and receive paths may operate asynchronously with respect to each other. Each path uses a 3-wire interface consisting of a bit clock, a frame synchronization signal, and a data signal.

The CPU interface can be either interrupt-driven or DMA. If the interface is configured for interrupt-driven I/O, data is buffered in the receive and transmit FIFOs. If the interface is configured for DMA, the data is buffered in registers.

The AAI is functionally similar to a Motorola™ Synchronous Serial Interface (SSI). Compared to a standard SSI implementation, the AAI interface does not support the so-called "On-demand Mode". It also does not allow gating of the shift clocks, so the receive and transmit shift clocks are always active while the AAI is enabled. The AAI also does not support 12- and 24-bit data word length or more than 4 slots (words) per frame. The reduction of supported modes is acceptable, because the main purpose of the AAI is to connect to audio codecs, rather than to other processors (DSPs).

The implementation of a FIFO as a 16-word receive and transmit buffer is an additional feature, which simplifies communication and reduces interrupt load. Independent DMA is provided for each of the four supported audio channels (slots). The AAI also provides special features and operating modes to simplify gain control in an external codec and to connect to an ISDN controller through an IOM-2 compatible interface.

17.1 AUDIO INTERFACE SIGNALS

17.1.1 Serial Transmit Data (STD)

The STD pin is used to transmit data from the serial transmit shift register (ATSR). The STD pin is an output when data is being transmitted and is in high-impedance mode when no data is being transmitted. The data on the STD pin changes on the positive edge of the transmit shift clock (SCK). The STD pin goes into high-impedance mode on the negative edge of SCK of the last bit of the data word to be transmitted, assuming no other data word follows immediately. If another data word follows immediately, the STD pin will not change to the high-impedance mode, instead remaining active. The data is shifted out with the most significant bit (MSB) first.

17.1.2 Serial Transmit Clock (SCK)

The SCK pin is a bidirectional signal that provides the serial shift clock. In asynchronous mode, this clock is used only by the transmitter to shift out data on the positive edge. The serial shift clock may be generated internally or it may be provided by an external clock source. In synchronous mode, the SCK pin is used by both the transmitter and the receiver. Data is shifted out from the STD pin on the positive edge, and data is sampled on the SRD pin on the negative edge of SCK.

17.1.3 Serial Transmit Frame Sync (SFS)

The SFS pin is a bidirectional signal which provides frame synchronization. In asynchronous mode, this signal is used as frame sync only by the transmitter. In synchronous mode, this signal is used as frame sync by both the transmitter and receiver. The frame sync signal may be generated internally, or it may be provided by an external source.

17.1.4 Serial Receive Data (SRD)

The SRD pin is used as an input when data is shifted into the Audio Receive Shift Register (ARSR). In asynchronous mode, data on the SRD pin is sampled on the negative edge of the serial receive shift clock (SRCLK). In synchronous mode, data on the SRD pin is sampled on the negative edge of the serial shift clock (SCK). The data is shifted into ARSR with the most significant bit (MSB) first.

17.1.5 Serial Receive Clock (SRCLK)

The SRCLK pin is a bidirectional signal that provides the receive serial shift clock in asynchronous mode. In this mode, data is sampled on the negative edge of SRCLK. The SRCLK signal may be generated internally or it may be provided by an external clock source. In synchronous mode, the SCK pin is used as shift clock for both the receiver and transmitter, so the SRCLK pin is available for use as a general-purpose port pin or an auxiliary frame sync signal to access multiple slave devices (e.g. codecs) within a network (see Network mode).

17.1.6 Serial Receive Frame Sync (SRFS)

The SRFS pin is a bidirectional signal that provides frame synchronization for the receiver in asynchronous mode. The frame sync signal may be generated internally, or it may be provided by an external source. In synchronous mode, the SFS signal is used as the frame sync signal for both the transmitter and receiver, so the SRFS pin is available for use as a general-purpose port pin or an auxiliary frame sync signal to access multiple slave devices (e.g. codecs) within a network (see Network mode).

17.2 AUDIO INTERFACE MODES

There are two clocking modes: asynchronous mode and synchronous mode. These modes differ in the source and timing of the clock signals used to transfer data. When the AAI is generating the bit shift clock and frame sync signals internally, synchronous mode must be used. In asynchronous mode, an external frame sync signal must be used.

There are two framing modes: normal mode and network mode. In normal mode, one word is transferred per frame. In network mode, up to four words are transferred per frame. A word may be 8 or 16 bits. The part of the frame which carries a word is called a slot. Network mode supports multiple external devices sharing the interface, in which each device is assigned its own slot. Separate frame sync signals are provided, so that each device is triggered to send or receive its data during its assigned slot.

17.2.1 Asynchronous Mode

In asynchronous mode, the receive and transmit paths of the audio interface operate independently, with each path using its own bit clock and frame sync signal. Independent clocks for receive and transmit are only used when the bit clock and frame sync signal are supplied externally. If the bit clock and frame sync signals are generated internally, both paths derive their clocks from the same set of clock prescalers.

17.2.2 Synchronous Mode

In synchronous mode, the receive and transmit paths of the audio interface use the same shift clock and frame sync signal. The bit shift clock and frame sync signal for both paths are derived from the same set of clock prescalers.

17.2.3 Normal Mode

In normal mode, each rising edge on the frame sync signal marks the beginning of a new frame and also the beginning of a new slot. A slot does not necessarily occupy the entire frame. (A frame can be longer than the data word transmitted after the frame sync pulse.) Typically, a codec starts transmitting a fixed length data word (e.g. 8-bit log PCM data) with the frame sync signal, then the codec's transmit pin returns to the high-impedance state for the remainder of the frame.

The Audio Receive Shift Register (ARSR) de-serializes received on the SRD pin (serial receiver data). Only the data sampled after the frame sync signal are treated as valid. If the interface is interrupt-driven, valid data bits are transferred from the ARSR to the receive FIFO. If the interface is configured for DMA, the data is transferred to the receive DMA register 0 (ARDR0).

The serial transmit data (STD) pin is only an active output while data is shifted out. After the defined number of data bits have been shifted out, the STD pin returns to the high-impedance state.

For operation in normal mode, the Slot Count Select bits (SCS[1:0]) in the Global Configuration register (AGCR) must be loaded with 00b (one slot per frame). In addition, the Slot Assignment bits for receive and transmit must be programmed to select slot 0.

If the interface is configured for DMA, the DMA slot assignment bits must also be programmed to select slot 0. In this case, the audio data is transferred to or from the receive or transmit DMA register 0 (ARDR0/ATDR0).

Figure 56 shows the frame timing while operating in normal mode with a long frame sync interval.

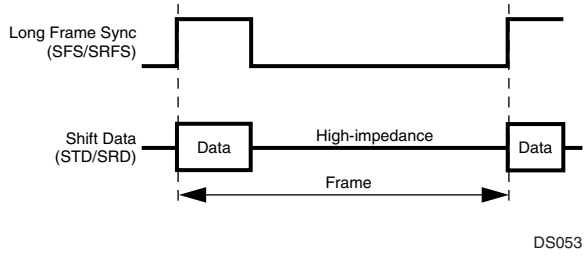

Figure 56. Normal Mode Frame

IRQ Support

If the receiver interface is configured for interrupt-driven I/O (RXDSA0 = 0), all received data are loaded into the receive FIFO. An IRQ is asserted as soon as the number of data bytes or words in the receive FIFO is greater than a programmable warning limit.

If the transmitter interface is configured for interrupt-driven I/O (TXDSA0 = 0), all data to be transmitted is read from the transmit FIFO. An IRQ is asserted as soon as the number data bytes or words available in the transmit FIFO is equal or less than a programmable warning limit.

DMA Support

If the receiver interface is configured for DMA (RXDSA0 = 1), received data is transferred from the ARSR into the DMA receive buffer 0 (ARDR0). A DMA request is asserted when the ARDR0 register is full. If the transmitter interface is configured for DMA (TXDSA0 = 1), data to be transmitted are read from the DMA transmit buffer 0 (ATDR0). A DMA request is asserted to the DMA controller when the ATDR0 register is empty.

Figure 57 shows the data flow for IRQ and DMA mode in normal Mode.

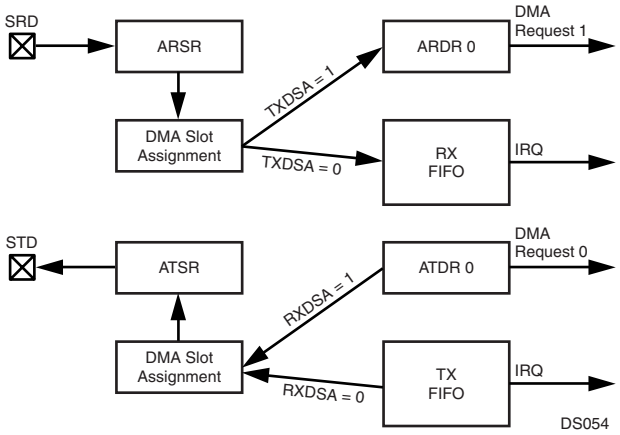

Figure 57. IRQ/DMA Support in Normal Mode

Network Mode

In network mode, each frame is composed of multiple slots. Each slot may transfer 8 or 16 bits. All of the slots in a frame must have the same length. In network mode, the sync signal marks the beginning of a new frame. Only frames with up to four slots are supported by this audio interface.

More than two devices can communicate within a network using the same clock and data lines. The devices connected to the same bus use a time-multiplexed approach to share access to the bus. Each device has certain slots assigned to it, in which only that device is allowed to transfer data. One master device provides the bit clock and the frame sync signal(s). On all other (slave) devices, the bit clock and frame sync pins are inputs.

Up to four slots can be assigned to the interface, as it supports up to four slots per frame. Any other slots within the frame are reserved for other devices.

The transmitter only drives data on the STD pin during slots which have been assigned to this interface. During all other slots, the STD output is in high-impedance mode, and data can be driven by other devices. The assignment of slots to the transmitter is specified by the Transmit Slot Assignment bits (TXSA) in the ATCR register. It can also be specified whether the data to be transmitted is transferred from the transmit FIFO or the corresponding DMA transmit register. There is one DMA transmit register (ATDRn) for each of the maximum four data slots. Each slot can be configured independently.

On the receiver side, only the valid data bits which were received during the slots assigned to this interface are copied into the receive FIFO or DMA registers. The assignment of slots to the receiver is specified by the Receive Slot Assignment bits (RXSA) in the ATCR register. It can also be specified whether the received data is copied into the receive FIFO or into the corresponding DMA receive register. There is one DMA receive register (ARDRn) for each of the maximum four data slots. Each slot may be configured individually.

Figure 58 shows the frame timing while operating in network mode with four slots per frame, slot 1 assigned to the interface, and a long frame sync interval.

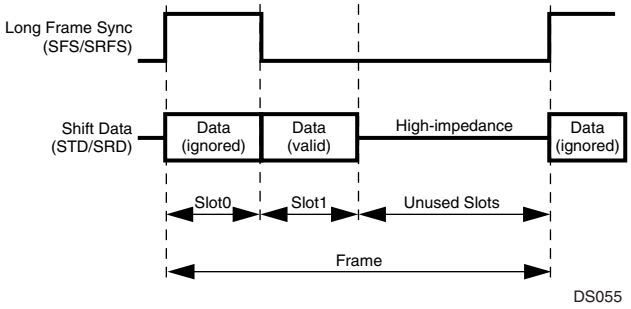

Figure 58. Network Mode Frame

IRQ Support

If DMA is not enabled for a receive slot n (RXDSAn = 0), all data received in this slot is loaded into the receive FIFO. An IRQ is asserted as soon as the number of data bytes or words in the receive FIFO is greater than a configured warning limit.

If DMA is not enabled for a transmit slot n (TXDSAn = 0), all data to be transmitted in this slot are read from the transmit FIFO. An IRQ is asserted as soon as the number data bytes or words available in the transmit FIFO is equal or less than a configured warning limit.

DMA Support

If DMA support is enabled for a receive slot n (RXDSA0 = 1), all data received in this slot is only transferred from the ARSR into the corresponding DMA receive register (ARDRn). A DMA request is asserted when the ARDRn register is full.

If DMA is enabled for a transmit slot n (TXDSAn = 1), all data to be transmitted in slot n are read from the corresponding DMA transmit register (ATDRn). A DMA request is asserted to the DMA controller when the ATDRn register is empty.

Figure 59 illustrates the data flow for IRQ and DMA support in network mode, using four slots per frame and DMA support enabled for slots 0 and 1 in receive and transmit direction.

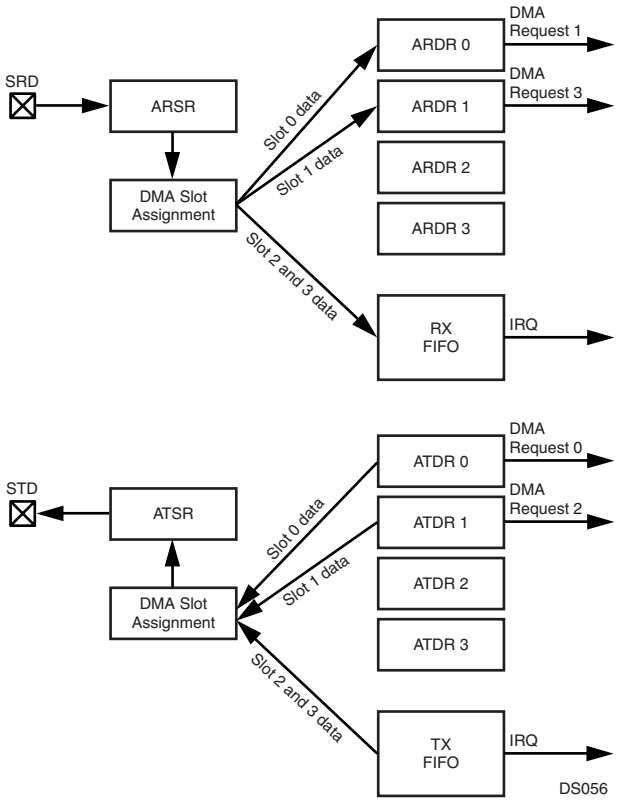

Figure 59. IRQ/DMA Support in Network Mode

If the interface operates in synchronous mode, the receiver uses the transmit bit clock (SCK) and transmit frame sync signal (SFS). This allows the pins used for the receive bit clock (SRCLK) and receive frame sync (SRFS) to be used as additional frame sync signals in network mode. The extra frame sync signals are useful when the audio interface communicates to more than one codec, because codecs typically start transmission immediately after the frame sync pulse. The SRCLK pin is driven with a frame sync pulse at the beginning of the second slot (slot 1), and the SRFS pin is driven with a frame sync pulse at the beginning of slot 2. Figure 60 shows a frame timing diagram for this configuration, using the additional frame sync signals on SRCLK and SRFS to address up to three devices.

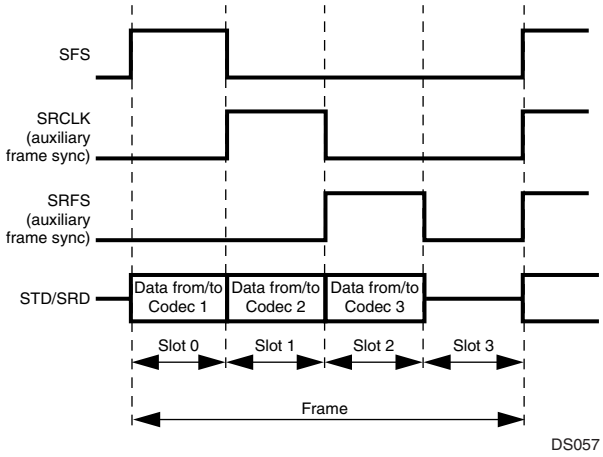

Figure 60. Accessing Three Devices in Network Mode

17.3 BIT CLOCK GENERATION

An 8-bit prescaler is provided to divide the audio interface input clock down to the required bit clock rate. Software can choose between two input clock sources, a primary and a secondary clock source.

On the CP3BT13, the two optional input clock sources are the 12-MHz Aux1 clock (also used for the Bluetooth LLC) and the 48-MHz PLL output clock. The input clock is divided by the value of the prescaler BCPRS[7:0] + 1 to generate the bit clock.

The bit clock rate f_{bit} can be calculated by the following equation:

$f_{bit} = n \times f_{Sample} \times$ Data Length

n = Number of Slots per Frame

f_{Sample} = Sample Frequency in Hz

Data Length = Length of data word in multiples of 8 bits

The ideal required prescaler value P_{ideal} can be calculated as follows:

$P_{ideal} = f_{Audio\ In} / f_{bit}$

The real prescaler must be set to an integer value, which should be as close as possible to the ideal prescaler value, to minimize the bit clock error, f_{bit_error}.

f_{bit_error} [%] = $(f_{bit} - f_{Audio\ In}/P_{real}) / f_{bit} \times 100$

Example:

The audio interface is used to transfer 13-bit linear PCM data for one audio channel at a sample rate of 8k samples per second. The input clock of the audio interface is 12 MHz. Furthermore, the codec requires a minimum bit clock of 256 kHz to operate properly. Therefore, the number of slots per frame must be set to 2 (network mode) although actually only one slot (slot 0) is used. The codec and the audio interface will put their data transmit pins in TRI-STATE mode after the PCM data word has been transferred. The required bit clock rate f_{bit} can be calculated by the following equation:

$f_{bit} = n \times f_{Sample} \times$ Data Length = 2 × 8 kHz × 16 = 256 kHz

The ideal required prescaler value P_{ideal} can be calculated as follows:

$P_{ideal} = f_{Audio\ In} / f_{bit}$ = 12 MHz / 256 kHz = 46.875

Therefore, the real prescaler value is 47. This results in a bit clock error equal to:

$f_{bit_error} = (f_{bit} - f_{Audio\ In}/P_{real}) / f_{bit} \times 100$

= (256 kHz - 12 MHz/47) / 256 kHz × 100 = 0.27%

17.4 FRAME CLOCK GENERATION

The clock for the frame synchronization signals is derived from the bit clock of the audio interface. A 7-bit prescaler is used to divide the bit clock to generate the frame sync clock for the receive and transmit operations. The bit clock is divided by FCPRS + 1. In other words, the value software must write into the ACCR.FCPRS field is equal to the bit number per frame minus one. The frame may be longer than the valid data word but it must be equal to or larger than the 8- or 16-bit word. Even if 13-, 14-, or 15-bit data is being used, the frame width must always be at least 16 bits wide.

In addition, software can specify the length of a long frame sync signal. A long frame sync signal can be either 6, 13, 14, 15, or 16 bits long, depending on the external codec being used. The frame sync length can be configured by the Frame Sync Length field (FSL) in the AGCR register.

17.5 AUDIO INTERFACE OPERATION

17.5.1 Clock Configuration

The Aux1 clock (generated by the Clock module described in Section 11.8) must be configured, because it is the time base for the AAI module. Software must write an appropriate divisor to the ACDIV1 field of the PRSAC register to provide a 12 MHz input clock. Software also must enable the Aux1 clock by setting the ACE1 bit in the CRCTRL register. For example:

```
PRSAC &= 0xF0;
// Set Aux1 prescaler to 1 (F = 12 MHz)
CRCTRL |= ACE1; // Enable Aux1 clk
```

17.5.2 Interrupts

The interrupt logic of the AAI combines up to four interrupt sources and generates one interrupt request signal to the Interrupt Control Unit (ICU).

The four interrupt sources are:

- RX FIFO Overrun - ASCR.RXEIP = 1
- RX FIFO Almost Full (Warning Level) - ASCR.RXIP = 1
- TX FIFO Under run - ASCR.TXEIP = 1
- TX FIFO Almost Empty (Warning Level) - ASCR.TXIP=1

In addition to the dedicated input to the ICU for handling these interrupt sources, the Serial Frame Sync (SFS) signal is an input to the MIWU (see Section 13.0), which can be programmed to generate edge-triggered interrupts.

Figure 61 shows the interrupt structure of the AAI.

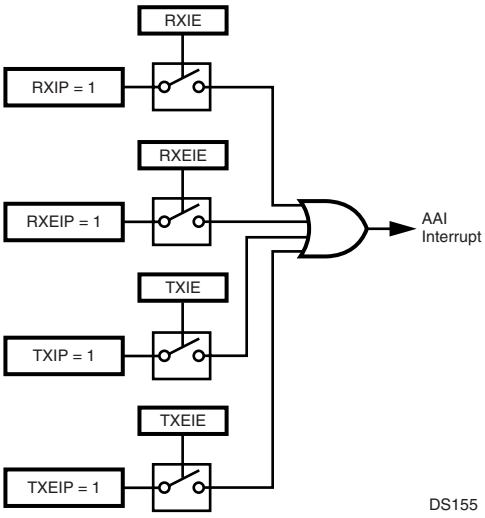

Figure 61. AAI Interrupt Structure

17.5.3 Normal Mode

In normal mode, each frame sync signal marks the beginning of a new frame and also the beginning of a new slot, since each frame only consists of one slot. All 16 receive and transmit FIFO locations hold data for the same (and only) slot of a frame. If 8-bit data are transferred, only the low byte of each 16-bit FIFO location holds valid data.

17.5.4 Transmit

Once the interface has been enabled, transmit transfers are initiated automatically at the beginning of every frame. The beginning of a new frame is identified by a frame sync pulse. Following the frame sync pulse, the data is shifted out from the ATSR to the STD pin on the positive edge of the transmit data shift clock (SCK).

DMA Operation

When a complete data word has been transmitted through the STD pin, a new data word is reloaded from the transmit DMA register 0 (ATDR0). A DMA request is asserted when the ATDR0 register is empty. If a new data word must be transmitted while the ATDR0 register is still empty, the previous data will be re-transmitted.

FIFO Operation

When a complete data word has been transmitted through the STD pin, a new data word is loaded from the transmit FIFO from the current location of the Transmit FIFO Read Pointer (TRP). After that, the TRP is automatically incremented by 1.

A write to the Audio Transmit FIFO Register (ATFR) results in a write to the transmit FIFO at the current location of the Transmit FIFO Write Pointer (TWP). After every write operation to the transmit FIFO, TWP is automatically incremented by 1.

When the TRP is equal to the TWP and the last access to the FIFO was a read operation (a transfer to the ATSR), the transmit FIFO is empty. When an additional read operation from the FIFO to ATSR is performed (while the FIFO is already empty), a transmit FIFO underrun occurs. In this event, the read pointer (TRP) will be decremented by 1 (incremented by 15) and the previous data word will be transmitted again. A transmit FIFO underrun is indicated by the TXU bit in the Audio Interface Transmit Status and Control Register (ATSCR). Also, no transmit interrupt will be generated (even if enabled).

When the TRP is equal to the TWP and the last access to the FIFO was a write operation (to the ATFR), the FIFO is full. If an additional write to ATFR is performed, a transmit FIFO overrun occurs. This error condition is not prevented by hardware. Software must ensure that no transmit overrun occurs.

The transmit frame synchronization pulse on the SFS pin and the transmit shift clock on the SCK pin may be generated internally, or they can be supplied by an external source.

17.5.5 Receive

At the receiver, the received data on the SRD pin is shifted into ARSR on the negative edge of SRCLK (or SCK in synchronous mode), following the receive frame sync pulse, SRFS (or SFS in synchronous mode).

DMA Operation

When a complete data word has been received through the SRD pin, the new data word is copied to the receive DMA register 0 (ARDR0). A DMA request is asserted when the ARDR0 register is full. If a new data word is received while the ARDR0 register is still full, the ARDR0 register will be overwritten with the new data.

FIFO Operation

When a complete word has been received, it is transferred to the receive FIFO at the current location of the Receive FIFO Write Pointer (RWP). Then, the RWP is automatically incremented by 1.

A read from the Audio Receive FIFO Register (ARFR) results in a read from the receive FIFO at the current location of the Receive FIFO Read Pointer (RRP). After every read operation from the receive FIFO, the RRP is automatically incremented by 1.

When the RRP is equal to the RWP and the last access to the FIFO was a copy operation from the ARFR, the receive FIFO is full. When a new complete data word has been shifted into ARSR while the receive FIFO was already full, the shift register overruns. In this case, the new data in the ARSR will not be copied into the FIFO and the RWP will not be incremented. A receive FIFO overrun is indicated by the RXO bit in the Audio Interface Receive Status and Control Register (ARSCR). No receive interrupt will be generated (even if enabled).

When the RWP is equal to the TWP and the last access to the receive FIFO was a read from the ARFR, a receive FIFO underrun has occurred. This error condition is not prevented by hardware. Software must ensure that no receive underrun occurs.

The receive frame synchronization pulse on the SRFS pin (or SFS in synchronous mode) and the receive shift clock on the SRCLK (or SCK in synchronous mode) may be gener-

ated internally, or they can be supplied by an external source.

17.5.6 Network Mode

In network mode, each frame sync signal marks the beginning of new frame. Each frame can consist of up to four slots. The audio interface operates in a similar way to normal mode, however, in network mode the transmitter and receiver can be assigned to specific slots within each frame as described below.

17.5.7 Transmit

The transmitter only shifts out data during the assigned slot. During all other slots the STD output is in TRI-STATE mode.

DMA Operation

When a complete data word has been transmitted through the STD pin, a new data word is reloaded from the corresponding transmit DMA register n (ATDRn). A DMA request is asserted when ATDRn is empty. If a new data word must be transmitted in a slot n while ATDRn is still empty, the previous slot n data will be retransmitted.

FIFO Operation

When a complete data word has been transmitted through the STD pin, a new data word is reloaded from the transmit FIFO from the current location of the Transmit FIFO Read Pointer (TRP). After that, the TRP is automatically incremented by 1. Therefore, the audio data to be transmitted in the next slot of the frame is read from the next FIFO location.

A write to the Audio Transmit FIFO Register (ATFR) results in a write to the transmit FIFO at the current location of the Transmit FIFO Write Pointer (TWP). After every write operation to the transmit FIFO, the TWP is automatically incremented by 1.

When the TRP is equal to the TWP and the last access to the FIFO was a read operation (transfer to the ATSR), the transmit FIFO is empty. When an additional read operation from the FIFO to the ATSR is performed (while the FIFO is already empty), a transmit FIFO underrun occurs. In this case, the read pointer (TRP) will be decremented by 1 (incremented by 15) and the previous data word will be transmitted again. A transmit FIFO underrun is indicated by the TXU bit in the Audio Interface Transmit Status and Control Register (ATSCR). No transmit interrupt will be generated (even if enabled).

If the current TRP is equal to the TWP and the last access to the FIFO was a write operation (to the ATFR), the FIFO is full. If an additional write to the ATFR is performed, a transmit FIFO overrun occurs. This error condition is not prevented by hardware. Software must ensure that no transmit overrun occurs.

The transmit frame synchronization pulse on the SFS pin and the transmit shift clock on the SCK pin may be generated internally, or they can be supplied by an external source.

17.5.8 Receive

The receive shift register (ARSR) receives data words of all slots in the frame, regardless of the slot assignment of the interface. However, only those ARSR contents are transferred to the receive FIFO or DMA receive register which were received during the assigned time slots. A receive interrupt or DMA request is initiated when this occurs.

DMA Operation

When a complete data word has been received through the SRD pin in a slot n, the new data word is transferred to the corresponding receive DMA register n (ARDRn). A DMA request is asserted when the ARDRn register is full. If a new slot n data word is received while the ARDRn register is still full, the ARDRn register will be overwritten with the new data.

FIFO Operation

When a complete word has been received, it is transferred to the receive FIFO at the current location of the Receive FIFO Write Pointer (RWP). After that, the RWP is automatically incremented by 1. Therefore, data received in the next slot is copied to the next higher FIFO location.

A read from the Audio Receive FIFO Register (ARFR) results in a read from the receive FIFO at the current location of the Receive FIFO Read Pointer (RRP). After every read operation from the receive FIFO, the RRP is automatically incremented by 1.

When the RRP is equal to the RWP and the last access to the FIFO was a transfer to the ARFR, the receive FIFO is full. When a new complete data word has been shifted into the ARSR while the receive FIFO was already full, the shift register overruns. In this case, the new data in the ARSR will not be transferred to the FIFO and the RWP will not be incremented. A receive FIFO overrun is indicated by the RXO bit in the Audio Interface Receive Status and Control Register (ARSCR). No receive interrupt will be generated (even if enabled).

When the current RWP is equal to the TWP and the last access to the receive FIFO was a read from ARFR, a receive FIFO underrun has occurred. This error condition is not prevented by hardware. Software must ensure that no receive underrun occurs.

The receive frame synchronization pulse on the SRFS pin (or SFS in synchronous mode) and the receive shift clock on the SRCLK (or SCK in synchronous mode) may be generated internally, or they can be supplied by an external source.

17.6 COMMUNICATION OPTIONS

17.6.1 Data Word Length

The word length of the audio data can be selected to be either 8 or 16 bits. In 16-bit mode, all 16 bits of the transmit and receive shift registers (ATSR and ARSR) are used. In 8-bit mode, only the lower 8 bits of the transmit and receive shift registers (ATSR and ARSR) are used.

17.6.2 Frame Sync Signal

The audio interface can be configured to use either long or short frame sync signals to mark the beginning of a new data frame. If the corresponding Frame Sync Select (FSS) bit in the Audio Control and Status register is clear, the receive and/or transmit path generates or recognizes short frame sync pulses with a length of one bit shift clock period. When these short frame sync pulses are used, the transfer

of the first data bit or the first slot begins at the first positive edge of the shift clock after the negative edge on the frame sync pulse.

If the corresponding Frame Sync Select (FSS) bit in the Audio Control and Status register is set, the receive and/or transmit path generates or recognizes long frame sync pulses. For 8-bit data, the frame sync pulse generated will be 6 bit shift clock periods long, and for 16-bit data the frame sync pulse can be configured to be 13, 14, 15, or 16 bit shift clock periods long. When receiving frame sync, it should be active on the first bit of data and stay active for a least two bit clock periods. It must go low for at least one bit clock period before starting a new frame. When long frame sync pulses are used, the transfer of the first word (first slot) begins at the first positive edge of the bit shift clock after the positive edge of the frame sync pulse. Figure 62 shows examples of short and long frame sync pulses.

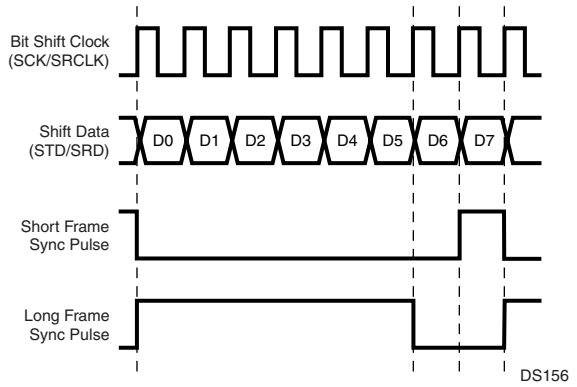

Figure 62. Short and Long Frame Sync Pulses

Some codecs require an inverted frame sync signal. This is available by setting the Inverted Frame Sync bit in the AGCR register.

17.6.3 Audio Control Data

The audio interface provides the option to fill a 16-bit slot with up to three data bits if only 13, 14, or 15 PCM data bits are transmitted. These additional bits are called audio control data and are appended to the PCM data stream. The AAI can be configured to append either 1, 2, or 3 audio control bits to the PCM data stream. The number of audio data bits to be used is specified by the 2-bit Audio Control On (ADMACR. ACO[1:0]) field. If the ACO field is not equal to 0, the specified number of bits are taken from the Audio Control Data field (ADMACR. ACD[2:0]) and appended to the data stream during every transmit operation. The ADC[0] bit is the first bit added to the transmit data stream after the last PCM data bit. Typically, these bits are used for gain control, if this feature is supported by the external PCM codec.Figure 63 shows a 16-bit slot comprising a 13-bit PCM data word plus three audio control bits.

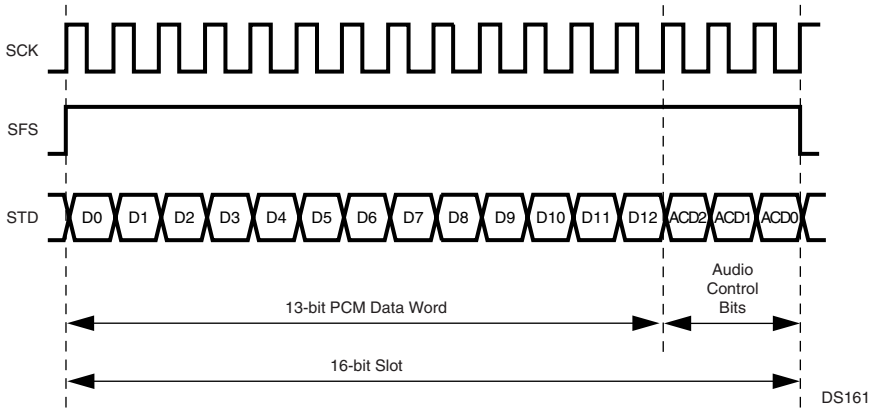

Figure 63. Audio Slot with Audio Control Data

17.6.4 IOM-2 Mode

The AAI can operate in a special IOM-2 compatible mode to allow to connect to an external ISDN controller device. In this IOM-2 mode, the AAI can only operate as a slave, i.e. the bit clock and frame sync signal is provided by the ISDN controller. The AAI only supports the B1 and B2 data of the IOM-2 channel 0, but ignores the other two IOM-2 channels. The AAI handles the B1 and B2 data as one 16-bit data word.

The IOM-2 interface has the following properties:

- Bit clock of 1536 kHz (output from the ISDN controller)
- Frame repetition rate of 8 ksps (output from the ISDN controller)
- Double-speed bit clock (one data bit is two bit clocks wide)
- B1 and B2 data use 8-bit log PCM format
- Long frame sync pulse

Figure 64 shows the structure of an IOM-2 Frame.

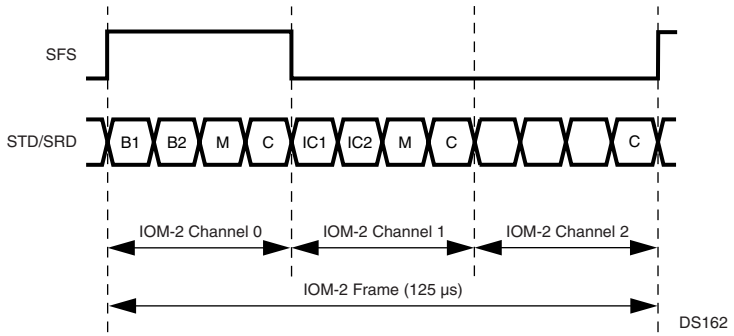

Figure 64. IOM-2 Frame Structure

Figure 65 shows the connections between an ISDN controller and a CP3BT13 using a standard IOM-2 interface for the B1/B2 data communication and the external bus interface (IO Expansion) for controlling the ISDN controller.

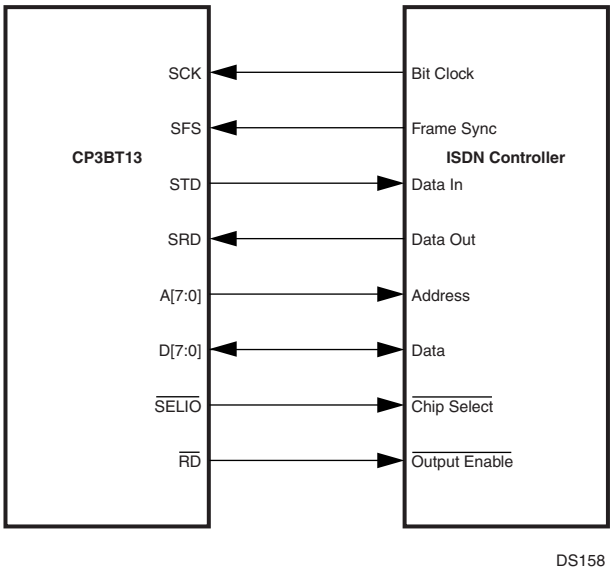

Figure 65. CP3BT13/ISDN Controller Connections

To connect the AAI to an ISDN controller through an IOM-2 compatible interface, the AAI needs to be configured in this way:

- The AAI must be in IOM-2 Mode (AGCR.IOM2 = 1).
- The AAI operates in synchronous mode (AGCR.ASS = 0).
- The AAI operates as a slave, therefore the bit clock and frame sync source selection must be set to external (ACGR.IEFS = 1, ACGR.IEBC = 1).
- The frame sync length must be set to long frame sync (ACGR.FSS = 1).
- The data word length must be set to 16-bit (AGCR.DWL = 1).
- The AAI must be set to normal mode (AGCR.SCS[1:0] = 0).
- The internal frame rate must be 8 ksps (ACCR = 00BE).

17.6.5 Loopback Mode

In loopback mode, the STD and SRD pins are internally connected together, so data shifted out through the ATSR register will be shifted into the ARSR register. This mode may be used for development, but it also allows testing the transmit and receive path without external circuitry, for example during Built-In-Self-Test (BIST).

17.6.6 Freeze Mode

The audio interface provides a FREEZE input, which allows to freeze the status of the audio interface while a development system examines the contents of the FIFOs and registers.

When the FREEZE input is asserted, the audio interface behaves as follows:

- The receive FIFO or receive DMA registers are not updated with new data.
- The receive status bits (RXO, RXE, RXF, and RXAF) are not changed, even though the receive FIFO or receive DMA registers are read.
- The transmit shift register (ATSR) is not updated with new data from the transmit FIFO or transmit DMA registers.
- The transmit status bits (TXU, TXF, TXE, and TXAE) are not changed, even though the transmit FIFO or transmit DMA registers are written.

The time at which these registers are frozen will vary because they operate from a different clock than the one used to generate the freeze signal.

17.7 AUDIO INTERFACE REGISTERS

Table 57 Audio Interface Registers

Name	Address	Description
ARFR	FF FD40h	Audio Receive FIFO Register
ARDR0	FF FD42h	Audio Receive DMA Register 0
ARDR1	FF FD44h	Audio Receive DMA Register 1
ARDR2	FF FD46h	Audio Receive DMA Register 2
ARDR3	FF FD48h	Audio Receive DMA Register 3
ATFR	FF FD4Ah	Audio Transmit FIFO Register
ATDR0	FF FD4Ch	Audio Transmit DMA Register 0
ATDR1	FF FD4Eh	Audio Transmit DMA Register 1
ATDR2	FF FD50h	Audio Transmit DMA Register 2
ATDR3	FF FD52h	Audio Transmit DMA Register 3
AGCR	FF FD54h	Audio Global Configuration Register
AISCR	FF FD56h	Audio Interrupt Status and Control Register
ARSCR	FF FD58h	Audio Receive Status and Control Register
ATSCR	FF FD5Ah	Audio Transmit Status and Control Register
ACCR	FF FD5Ch	Audio Clock Control Register
ADMACR	FF FD5Eh	Audio DMA Control Register

17.7.1 Audio Receive FIFO Register (ARFR)

The Audio Receive FIFO register shows the receive FIFO location currently addressed by the Receive FIFO Read Pointer (RRP). The receive FIFO receives 8-bit or 16-bit data from the Audio Receive Shift Register (ARSR), when the ARSR is full.

In 8-bit mode, only the lower byte of the ARFR is used, and the upper byte contains undefined data. In 16-bit mode, a 16-bit word is copied from ARSR into the receive FIFO. The CPU bus master has read-only access to the receive FIFO, represented by the ARFR register. After reset, the receive FIFO (ARFR) contains undefined data.

7	0
ARFL	

15	8
ARFH	

ARFL — The Audio Receive FIFO Low Byte shows the lower byte of the receive FIFO location currently addressed by the Receive FIFO Read Pointer (RRP).

ARFH — The Audio Receive FIFO High Byte shows the upper byte of the receive FIFO location currently addressed by the Receive FIFO Read Pointer (RRP). In 8-bit mode, ARFH contains undefined data.

17.7.2 Audio Receive DMA Register n (ARDRn)

The ARDRn register contains the data received within slot n, assigned for DMA support. In 8-bit mode, only the lower 8-bit portion of the ARDRn register is used, and the upper byte contains undefined data. In 16-bit mode, a 16-bit word is transferred from the Audio Receive Shift Register (ARSR) into the ARDRn register. The CPU bus master, typically a DMA controller, has read-only access to the receive DMA registers. After reset, these registers are clear.

7	0
ARDL	

15	8
ARDH	

ARDL — The Audio Receive DMA Low Byte field receives the lower byte of the audio data copied from the ARSR.

ARDH — In 16-bit mode, the Audio Receive DMA High Byte field receives the upper byte of the audio data word copied from ARSR. In 8-bit mode, the ARDH register holds undefined data.

17.7.3 Audio Transmit FIFO Register (ATFR)

The ATFR register shows the transmit FIFO location currently addressed by the Transmit FIFO Write Pointer (TWP). The Audio Transmit Shift Register (ATSR) receives 8-bit or 16-bit data from the transmit FIFO, when the ATSR is empty. In 8-bit mode, only the lower 8-bit portion of the ATSR is used, and the upper byte is ignored (not transferred into the ATSR). In 16-bit mode, a 16-bit word is copied from the transmit FIFO into the ATSR. The CPU bus master has write-only access to the transmit FIFO, represented by the ATFR register. After reset, the transmit FIFO (ATFR) contains undefined data.

7	0
ATFL	

15	8
ATFH	

ATFL — The Audio Transmit Low Byte field represents the lower byte of the transmit FIFO location currently addressed by the Transmit FIFO Write Pointer (TWP).

ATFH — In 16-bit mode, the Audio Transmit FIFO High Byte field represents the upper byte of the transmit FIFO location currently addressed by the Transmit FIFO Write Pointer (TWP). In 8-bit mode, the ATFH field is not used.

17.7.4 Audio Transmit DMA Register n (ATDRn)

The ATDRn register contains the data to be transmitted in slot n, assigned for DMA support. In 8-bit mode, only the lower 8-bit portion of the ATDRn register is used, and the upper byte is ignored (not transferred into the ATSR). In 16-bit mode, the whole 16-bit word is transferred into the ATSR. The CPU bus master, typically a DMA controller, has write-only access to the transmit DMA registers. After reset, these registers are clear.

7	0
ATDL	

15	8
ATDH	

ATDL — The Audio Transmit DMA Low Byte field holds the lower byte of the audio data.

ATDH — In 16-bit mode, the Audio Transmit DMA High Byte field holds the upper byte of the audio data word. In 8-bit mode, the ATDH field is ignored.

17.7.5 Audio Global Configuration Register (AGCR)

The AGCR register controls the basic operation of the interface. The CPU bus master has read/write access to the AGCR register. After reset, this register is clear.

7	6	5	4	3	2	1	0
IEBC	FSS	IEFS	SCS		LPB	DWL	ASS

15	14	13	12	11	10	9	8
CLKEN	AAIEN	IOM2	IFS	FSL		CTF	CRF

ASS — The Asynchronous/Synchronous Mode Select bit controls whether the audio interface operates in Asynchronous or in Synchronous mode. After reset the ASS bit is clear, so the Synchronous mode is selected by default.
0 – Synchronous mode.
1 – Asynchronous mode.

DWL — The Data Word Length bit controls whether the transferred data word has a length of 8 or 16 bits. After reset, the DWL bit is clear, so 8-bit data words are used by default.
0 – 8-bit data word length.
1 – 16-bit data word length.

LPB — The Loop Back bit enables the loop back mode. In this mode, the SRD and STD pins are internally connected. After reset the LPB bit is clear, so by default the loop back mode is disabled.
0 – Loop back mode disabled.
1 – Loop back mode enabled.

SCS — The Slot Count Select field specifies the number of slots within each frame. If the number of slots per frame is equal to 1, the audio interface operates in normal mode. If the number of slots per frame is greater than 1, the interface operates in network mode. After reset all SCS bits are cleared, so by default the audio interface operates in normal mode.

SCS	Number of Slots per Frame	Mode
00	1	Normal mode
01	2	Network mode
10	3	Network mode
11	4	Network mode

IEFS — The Internal/External Frame Sync bit controls, whether the frame sync signal for the receiver and transmitter are generated internally or provided from an external source. After reset, the IEFS bit is clear, so the frame synchronization signals are generated internally by default.
0 – Internal frame synchronization signal.
1 – External frame synchronization signal.

FSS — The Frame Sync Select bit controls whether the interface (receiver and transmitter) uses long or short frame synchronization signals. After reset the FSS bit is clear, so short frame synchronization signals are used by default.
0 – Short (bit length) frame synchronization signal.
1 – Long (word length) frame synchronization signal.

IEBC — The Internal/External Bit Clock bit controls whether the bit clocks for receiver and transmitter are generated internally or provided from an external source. After reset, the IEBC bit is clear, so the bit clocks are generated internally by default.
0 – Internal bit clock.
1 – External bit clock.

CRF — The Clear Receive FIFO bit is used to clear the receive FIFO. When this bit is written with a 1, all pointers of the receive FIFO are set to their reset state. After updating the pointers, the CRF bit will automatically be cleared again.
0 – Writing 0 has no effect.
1 – Writing 1 clears the receive FIFO.

CTF — The Clear Transmit FIFO bit is used to clear the transmit FIFO. When this bit is written with a 1, all pointers of the transmit FIFO are set to their reset state. After updating the pointers, the CTF bit will automatically be cleared again.
0 – Writing 0 has no effect.
1 – Writing 1 clears the transmit FIFO.

FSL — The Frame Sync Length field specifies the length of the frame synchronization signal, when a long frame sync signal (FSS = 1) and a 16-bit data word length (DWL = 1) are used. If an 8-bit data word length is used, long frame syncs are always 6 bit clocks in length.

FSL	Frame Sync Length
00	13 bit clocks
01	14 bit clocks
10	15 bit clocks
11	16 bit clocks

IFS — The Inverted Frame Sync bit controls the polarity of the frame sync signal.
0 – Active-high frame sync signal.
1 – Active-low frame sync signal.

IOM2 The IOM-2 Mode bit selects the normal PCM interface mode or a special IOM-2 mode used to connect to external ISDN controller devices. The AAI can only operate as a slave in the IOM-2 mode, i.e. the bit clock and frame sync signals are provided by the ISDN controller. If the IOM2 bit is clear, the AAI operates in the normal PCM interface mode used to connect to external PCM codecs and other PCM audio devices.
0 – IOM-2 mode disabled.
1 – IOM-2 mode enabled.

AAIEN The AAI Enable bit controls whether the Advanced Audio Interface is enabled. All AAI registers provide read/write access while (CLKEN = 1) AAIEN is clear. The AAIEN bit is clear after reset.
0 – AAI module disabled.
1 – AAI module enabled.

CLKEN The Clock Enable bit controls whether the Advanced Audio Interface clock is enabled. The CLKEN bit must be set to allow access to any AAI register. It must also be set before any other bit of the AGCR can be set. The CLKEN bit is clear after reset.
0 – AAI module clock disabled.
1 – AAI module clock enabled.

17.7.6 Audio Interrupt Status and Control Register (AISCR)

The ASCR register is used to specify the source and the conditions, when the audio interface interrupt is asserted to the Interrupt Control Unit. It also holds the interrupt pending bits and the corresponding interrupt clear bits for each audio interface interrupt source. The CPU bus master has read/write access to the ASCR register. After reset, this register is clear.

7	6	5	4	3	2	1	0
TXEIP	TXIP	RXEIP	RXIP	TXEIE	TXIE	RXEIE	RXIE

15	12	11	10	9	8
Reserved		TXEIC	TXIC	RXEIC	RXIC

RXIE The Receive Interrupt Enable bit controls whether receive interrupts are generated. If the RXIE bit is clear, no receive interrupt will be generated.
0 – Receive interrupt disabled.
1 – Receive interrupt enabled.

RXEIE The Receive Error Interrupt Enable bit controls whether receive error interrupts are generated. Setting this bit enables a receive error interrupt, when the Receive Buffer Overrun (RXOR) bit is set. If the RXEIE bit is clear, no receive error interrupt will be generated.
0 – Receive error interrupt disabled.
1 – Receive error interrupt enabled.

TXIE The Transmit Interrupt Enable bit controls whether transmit interrupts are generated. Setting this bit enables a transmit interrupt, when the Transmit Buffer Almost Empty (TXAE) bit is set. If the TXIE bit is clear, no interrupt will be generated.
0 – Transmit interrupt disabled.
1 – Transmit interrupt enabled.

TXEIE The Transmit Error Interrupt Enable bit controls whether transmit error interrupts are generated. Setting this bit to 1 enables a transmit error interrupt, when the Transmit Buffer Underrun (TXUR) bit is set. If the TXEIE bit is clear, no transmit error interrupt will be generated.
0 – Transmit error interrupt disabled.
1 – Transmit error interrupt enabled.

RXIP The Receive Interrupt Pending bit indicates that a receive interrupt is currently pending. The RXIP bit is cleared by writing a 1 to the RXIC bit. The RXIP bit provides read-only access.
0 – No receive interrupt pending.
1 – Receive interrupt pending.

RXEIP The Receive Error Interrupt Pending bit indicates that a receive error interrupt is currently pending. The RXEIP bit is cleared by writing a 1 to the RXEIC bit. The RXEIP bit provides read-only access.
0 – No receive error interrupt pending.
1 – Receive error interrupt pending.

TXIP The Transmit Interrupt Pending bit indicates that a transmit interrupt is currently pending. The TXIP bit is cleared by writing a 1 to the TXIC bit. The TXIP bit provides read-only access.
0 – No transmit interrupt pending.
1 – Transmit interrupt pending.

TXEIP Transmit Error Interrupt Pending. This bit indicates that a transmit error interrupt is currently pending. The TXEIP bit is cleared by software by writing a 1 to the TXEIC bit. The TXEIP bit provides read-only access.
0 – No transmit error interrupt pending.
1 – Transmit error interrupt pending.

RXIC The Receive Interrupt Clear bit is used to clear the RXIP bit.
0 – Writing a 0 to the RXIC bit is ignored.
1 – Writing a 1 clears the RXIP bit.

RXEIC The Receive Error Interrupt Clear bit is used to clear the RXEIP bit.
0 – Writing a 0 to the RXEIC bit is ignored.
1 – Writing a 1 clears the RXEIP bit.

TXIC The Transmit Interrupt Clear bit is used to clear the TXIP bit.
0 – Writing a 0 to the TXIC bit is ignored.
1 – Writing a 1 clears the TXIP bit.

TXEIC The Transmit Error Interrupt Clear bit is used to clear the TXEIP bit.
0 – Writing a 0 to the TXEIC bit is ignored.
1 – Writing a 1 clears the TXEIP bit.

17.7.7 Audio Receive Status and Control Register (ARSCR)

The ARSCR register is used to control the operation of the receiver path of the audio interface. It also holds bits which report the current status of the receive FIFO. The CPU bus master has read/write access to the ASCR register. At reset, this register is loaded with 0004h.

7 – 4	3	2	1	0
RXSA	RXO	RXE	RXF	RXAF

15 – 12	11 – 8
RXFWL	RXDSA

RXAF The Receive Buffer Almost Full bit is set when the number of data bytes/words in the receive buffer is equal to the specified warning limit.
0 – Receive FIFO below warning limit.
1 – Receive FIFO is almost full.

RXF The Receive Buffer Full bit is set when the receive buffer is full. The RXF bit is set when the RWP is equal to the RRP and the last access was a write to the FIFO.
0 – Receive FIFO is not full.
1 – Receive FIFO full.

RXE The Receive Buffer Empty bit is set when the the RRP is equal to the RWP and the last access to the FIFO was a read operation (read from ARDR).
0 – Receive FIFO is not empty.
1 – Receive FIFO is empty.

RXO The Receive Overflow bit indicates that a receive shift register has overrun. This occurs, when a completed data word has been shifted into ARSR, while the receive FIFO was already full (the RXF bit was set). In this case, the new data in ARSR will not be copied into the FIFO and the RWP will not be incremented. Also, no receive interrupt and DMA request will generated (even if enabled).
0 – No overflow has occurred.
1 – Overflow has occurred.

RXSA The Receive Slot Assignment field specifies which slots are recognized by the receiver of the audio interface. Multiple slots may be enabled. If the frame consists of less than 4 slots, the RXSA bits for unused slots are ignored. For example, if a frame only consists of 2 slots, RXSA bits 2 and 3 are ignored.

The following table shows the slot assignment scheme.

RXSA Bit	Slots Enabled
RXSA0	0
RXSA1	1
RXSA2	2
RXSA3	3

After reset the RXSA field is clear, so software must load the correct slot assignment.

RXDSA The Receive DMA Slot Assignment field specifies which slots (audio channels) are supported by DMA. If the RXDSA bit is set for an assigned slot n (RXSAn = 1), the data received within this slot will not be transferred into the receive FIFO, but will instead be written into the corresponding Receive DMA data register (ARDRn). A DMA request n is asserted, when the ARDRn is full and if the RMA bit n is set. If the RXSD bit for a slot is clear, the RXDSA bit is ignored. The following table shows the DMA slot assignment scheme.

RXDSA Bit	Slots Enabled for DMA
RXDSA0	0
RXDSA1	1
RXDSA2	2
RXDSA3	3

RXFWL The Receive FIFO Warning Level field specifies when a receive interrupt is asserted. A receive interrupt is asserted, when the number of bytes/words in the receive FIFO is greater than the warning level value. An RXFWL value of 0 means that a receive interrupt is asserted if one or more bytes/words are in the RX FIFO. After reset, the RXFWL bit is clear.

17.7.8 Audio Transmit Status and Control Register (ATSCR)

The ASCR register controls the basic operation of the interface. It also holds bits which report the current status of the audio communication. The CPU bus master has read/write access to the ASCR register. At reset, this register is loaded with F003h.

7 – 4	3	2	1	0
TXSA	TXU	TXF	TXE	TXAE

15 – 12	11 – 8
TXFWL	TXDSA

TXAE — The Transmit FIFO Almost Empty bit is set when the number of data bytes/words in transmit buffer is equal to the specified warning limit.
0 – Transmit FIFO above warning limit.
1 – Transmit FIFO at or below warning limit.

TXE — The Transmit FIFO Empty bit is set when the transmit buffer is empty. The TXE bit is set to one every time the TRP is equal to the TWP and the last access to the FIFO was read operation (into ATSR).
0 – Transmit FIFO not empty.
1 – Transmit FIFO empty.

TXF — The Transmit FIFO Full bit is set when the TWP is equal to the TRP and the last access to the FIFO was write operation (write to ATDR).
0 – Transmit FIFO not full.
1 – Transmit FIFO full.

TXU — The Transmit Underflow bit indicates that the transmit shift register (ATSR) has underrun. This occurs when the transmit FIFO was already empty and a complete data word has been transferred. In this case, the TRP will be decremented by 1 and the previous data will be retransmitted. No transmit interrupt and no DMA request will be generated (even if enabled).
0 – Transmit underrun occurred.
1 – Transmit underrun did not occur.

TXSA — The Transmit Slot Assignment field specifies during which slots the transmitter is active and drives data through the STD pin. The STD pin is in high impedance state during all other slots. If the frame consists of less than 4 slots, the TXSA bits for unused slots are ignored. For example, if a frame only consists of 2 slots, TXSA bits 2 and 3 are ignored. The following table shows the slot assignment scheme.

TXSA Bit	Slots Enabled
TXSA0	0
TXSA1	1
TXSA2	2
TXSA3	3

After reset, the TXSA field is clear, so software must load the correct slot assignment.

TXDSA — The Transmit DMA Slot Assignment field specifies which slots (audio channels) are supported by DMA. If the TXDSA bit is set for an assigned slot n (TXSAn = 1), the data to be transmitted within this slot will not be read from the transmit FIFO, but will instead be read from the corresponding Transmit DMA data register (ATDRn). A DMA request n is asserted when the ATDRn is empty. If the TSA bit for a slot is clear, the TXDSA bit is ignored. The following table shows the DMA slot assignment scheme.

TXDSA Bit	Slots Enabled for DMA
TXDSA0	0
TXDSA1	1
TXDSA2	2
TXDSA3	3

TFWL — The Transmit FIFO Warning Level field specifies when a transmit interrupt is asserted. A transmit interrupt is asserted when the number of bytes or words in the transmit FIFO is equal or less than the warning level value. A TXFWL value of Fh means that a transmit interrupt is asserted if one or more bytes or words are available in the transmit FIFO. At reset, the TXFWL field is loaded with Fh.

17.7.9 Audio Clock Control Register (ACCR)

The ACCR register is used to control the bit timing of the audio interface. After reset, this register is clear.

7 … 1	0
FCPRS	CSS

15 … 8
BCPRS

CSS — The Clock Source Select bit selects one out of two possible clock sources for the audio interface. After reset, the CSS bit is clear.
0 – The Aux1 clock is used to clock the Audio Interface.
1 – The 48-MHz clock is used to clock the Audio Interface.

FCPRS — The Frame Clock Prescaler is used to divide the bit clock to generate the frame clock for the receive and transmit operations. The bit clock is divided by (FCPRS + 1). After reset, the FCPRS field is clear. The maximum allowed bit clock rate to achieve an 8 kHz frame clock is 1024 kHz. This value must be set correctly even if the frame sync is generated externally.

BCPRS — The Bit Clock Prescaler is used to divide the audio interface clock (selected by the CSS bit) to generate the bit clock for the receive and transmit operations. The audio interface input clock is divided by (BCPRS + 1). After reset, the BCPRS[7:0] bits are clear.

17.7.10 Audio DMA Control Register (ADMACR)

The ADMACR register is used to control the DMA support of the audio interface. In addition, it is used to configure the automatic transmission of the audio control bits. After reset, this register is clear.

7 … 4	3 … 0
TMD	RMD

15 … 13	12 … 11	10 … 8
Reserved	ACO	ACD

RMD — The Receive Master DMA field specify which slots (audio channels) are supported by DMA, i.e. when a DMA request is asserted to the DMA controller. If the RMDn bit is set for an assigned slot n (RXDSAn = 1), a DMA request n is asserted, when the ARDRn is full. If the RXDSAn bit for a slot is clear, the RMDn bit is ignored. The following table shows the receive DMA request scheme.

RMD	DMA Request Condition
0000	None
0001	ARDR0 full
0010	ARDR1 full
0011	ARDR0 full or ARDR1 full
x1xx	Not supported on CP3BT13
1xxx	

TMD — The Transmit Master DMA field specifies which slots (audio channels) are supported by DMA, i.e. when a DMA request is asserted to the DMA controller. If the TMD bit is set for an assigned slot n (TXDSAn = 1), a DMA request n is asserted, when the ATDRn register is empty. If the TXDSA bit for a slot is clear, the TMD bit is ignored. The following table shows the transmit DMA request scheme.

TMD	DMA Request Condition
0000	None
0001	ATDR0 empty
0010	ATDR1 empty
0011	ATDR0 empty or ATDR1 empty
x1xx	Not supported on CP3BT13
1xxx	

ACD — The Audio Control Data field is used to fill the remaining bits of a 16-bit slot if only 13, 14, or 15 bits of PCM audio data are transmitted.

ACO — The Audio Control Output field controls the number of control bits appended to the PCM data word.
00 – No Audio Control bits are appended.
01 – Append ACD0.
10 – Append ACD1:0.
11 – Append ACD2:0.

17.8 USAGE HINTS

When the Advanced Audio Interface is active, it can lock up if the receive FIFO is cleared by writing 1 to the AGCR.CRF bit, the transmit FIFO is cleared by writing 1 to the AGCR.CTF bit, or the module is disabled by clearing the AGCR.AAIEN bit.

Follow this procedure to disable the Advanced Audio Interface:

1. Clear the ARSCR.RXSA and ATSCR.TXSA fields.
2. Wait at least 10 receive/transmit clock cycles.
3. Clear the AGCR.AAIEN bit.

18.0 CVSD/PCM Conversion Module

The CVSD/PCM module performs conversion between CVSD data and PCM data, in which the CVSD encoding is as defined in the Bluetooth specification and the PCM encoding may be 8-bit µ-Law, 8-bit A-Law, or 13-bit to 16-bit Linear.

The CVSD conversion module operates at a fixed rate of 125 µs (8 kHz) per PCM sample. On the CVSD side, there is a read and a write FIFO allowing up to 8 words of data to be read or written at the same time. On the PCM side, there is a double-buffered register requiring data to be read and written every 125 µs. The intended use is to move CVSD data into the module with a CVSD interrupt handler, and to move PCM data with DMA. Figure 66 shows a block diagram of the CVSD to PCM module.

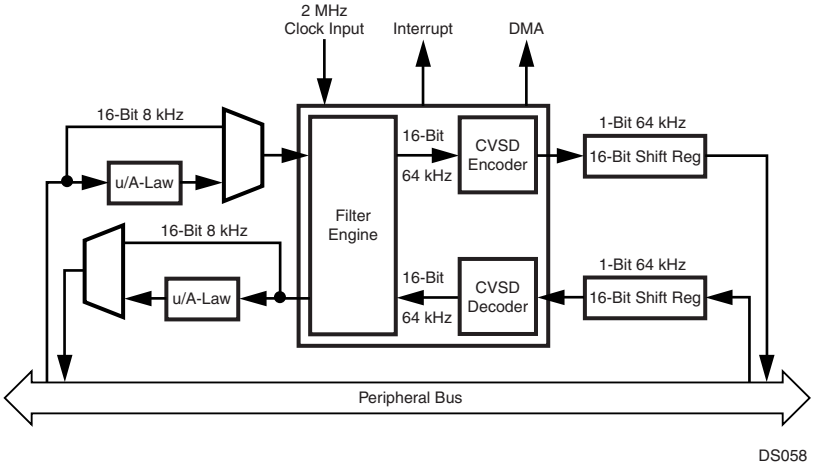

Figure 66. CVSD/PCM Converter Block Diagram

18.1 OPERATION

The Aux2 clock (generated by the Clock module described in Section 11.8) must be configured, because it drives the CVSD module. Software must set its prescaler to provide a 2 MHz input clock based upon the System Clock (usually 12 MHz). This is done by writing an appropriate divisor to the ACDIV2 field of the PRSAC register. Software must also enable the Aux2 clock by setting the ACE2 bit within the CRCTRL register. For example:

```
PRSAC &= 0x0f;
// Set Aux2 prescaler to generate
// 2 MHz (Fsys = 12 MHz)
PRSAC |= 0x50;
CRCTRL |= ACE2; // Enable Aux2 clk
```

The module converts between PCM data and CVSD data at a fixed rate of 8 kHz per PCM sample. Due to compression, the data rate on the CVSD side is only 4 kHz per CVSD sample.

If PCM interrupts are enabled (PCMINT is set) every 125 µs (8 kHz) an interrupt will occur and the interrupt handler can operate on some or all of the four audio streams CVSD in, CVSD out, PCM in, and PCM out. Alternatively, a DMA request is issued every 125 µs and the DMA controller is used to move the PCM data between the CVSD/PCM module and the audio interface.

If CVSD interrupts are enabled, an interrupt is issued when either one of the CVSD FIFOs is almost empty or almost full. On the PCM data side there is double buffering, and on the CVSD side there is an eight word (8 × 16-bit) FIFO for the read and write paths.

Inside the module, a filter engine receives the 8 kHz stream of 16-bit samples and interpolates to generate a 64 kHz stream of 16-bit samples. This goes into a CVSD encoder which converts the data into a single-bit delta stream using the CVSD parameters as defined by the Bluetooth specification. There is a similar path that reverses this process converting the CVSD 64 kHz bit stream into a 64 kHz 16-bit data stream. The filter engine then decimates this stream into an 8 kHz, 16-bit data stream.

18.2 PCM CONVERSIONS

During conversion between CVSD and PCM, any PCM format changes are done automatically depending on whether the PCM data is µ-Law, A-Law, or Linear. In addition to this, a separate function can be used to convert between the various PCM formats as required. Conversion is performed by setting up the control bit CVCTL1.PCMCONV to define the conversion and then writing to the LOGIN and LINEARIN registers and reading from the LOGOUT and LINEAROUT registers. There is no delay in the conversion operation and it does not have to operate at a fixed rate. It will only convert between µ-Law/A-Law and linear, not directly between µ-Law and A-Law. (This could easily be achieved by converting between µ-Law and linear and between linear and A-Law.)

If a conversion is performed between linear and µ-Law log PCM data, the linear PCM data are treated in the left-aligned 14-bit linear data format with the two LSBs unused. If a conversion is performed between linear and A-Law log PCM data, the linear PCM data are treated in the left-aligned 13-bit linear data format with the three LSBs unused.

If the module is only used for PCM conversions, the CVSD clock can be disabled by clearing the CVSD Clock Enable bit (CLKEN) in the control register.

18.3 CVSD CONVERSION

The CVSD/PCM converter module transforms either 8-bit logarithmic or 13- to 16-bit linear PCM samples at a fixed rate of 8 ksps. The CVSD to PCM conversion format must be specified by the CVSDCONV control bits in the CVSD Control register (CVCTRL).

The CVSD algorithm is designed for 2's complement 16-bit data and is tuned for best performance with typical voice data. Mild distortion will occur for peak signals greater than -6 dB. The Bluetooth CVSD standard is designed for best performace with typical voice signals: nominaly -6dB with occasional peaks to 0dB rather than full-scale inputs. Distortion of signals greater than -6dB is not considered detrimental to subjective quality tests for voice-band applications and allows for greater clarity for signals below -6dB. The gain of the input device should be tuned with this in mind.

If required, the RESOLUTION field of the CVCTRL register can be used to optimize the level of the 16-bit linear input data by providing attenuations (right-shifts with sign extention) of 1, 2, or 3 bits.

Log data is always 8 bit, but to perform the CVSD conversion, the log data is first converted to 16-bit 2's complement linear data. A-law and u-law conversion can also slightly affect the optimum gain of the input data. The CVCTRL.RESOLUTION field can be used to attenuate the data if required.

If the resolution is not set properly, the audio signal may be clipped or have reduced attenuation.

18.4 PCM TO CVSD CONVERSION

The converter core reads out the double-buffered PCMIN register every 125 µs and writes a new 16-bit CVSD data stream into the CVSD Out FIFO every 250 µs. If the PCMIN buffer has not been updated with a new PCM sample between two reads from the CVSD core, the old PCM data is used again to maintain a fixed conversion rate. Once a new 16-bit CVSD data stream has been calculated, it is copied into the 8 × 16-bit wide CVSD Out FIFO.

If there are only three empty words (16-bit) left in the FIFO, the nearly full bit (CVNF) is set, and, if enabled (CVSDINT = 1), an interrupt request is asserted.

If the CVSD Out FIFO is full, the full bit (CVF) is set, and, if enabled (CVSDERRINT = 1), an interrupt request is asserted. In this case, the CVSD Out FIFO remains unchanged.

Within the interrupt handler, the CPU can read out the new CVSD data. If the CPU reads from an already empty CVSD Out FIFO, a lockup of the FIFO logic may occur which persists until the next reset. Software *must* check the CVOUTST field of the CVSTAT register to read the number of valid words in the FIFO. Software *must not* use the CVNF bit as an indication of the number of valid words in the FIFO.

18.5 CVSD TO PCM CONVERSION

The converter core reads from the CVSD In FIFO every 250 µs and writes a new PCM sample into the PCMOUT buffer every 125 µs. If the previous PCM data has not yet been transferred to the audio interface, it will be overwritten with the new PCM sample.

If there are only three unread words left, the CVSD In Nearly Empty bit (CVNE) is set and, if enabled (CVSDINT = 1), an interrupt request is generated.

If the CVSD In FIFO is empty, the CVSD In Empty bit (CVE) is set and, if enabled (CVSDERRINT = 1), an interrupt request is generated. If the converter core reads from an already empty CVSD In FIFO, the FIFO automatically returns a checkerboard pattern to guarantee a minimum level of distortion of the audio stream.

18.6 INTERRUPT GENERATION

An interrupt is generated in any of the following cases:

- When a new PCM sample has been written into the PCMOUT register and the CVCTRL.PCMINT bit is set.
- When a new PCM sample has been read from the PCMIN register and the CVCTRL.PCMINT bit is set.
- When the CVSD In FIFO is nearly empty (CVSTAT.CVNE = 1) and the CVCTRL.CVSDINT bit is set.
- When the CVSD Out FIFO is nearly full (CVSTAT.CVNF = 1) and the CVCTRL.CVSDINT bit is set.
- When the CVSD In FIFO is empty (CVSTAT.CVE = 1) and the CVCTRL.CVSDERRINT bit is set.
- When the CVSD Out FIFO is full (CVSTAT.CVF = 1) and the CVCTRL.CVSDERRINT bit is set.

Both the CVSD In and CVSD Out FIFOs have a size of 8 × 16 bit (8 words). The warning limits for the two FIFOs is set at 5 words. (The CVSD In FIFO interrupt will occur when there are 3 words left in the FIFO, and the CVSD Out FIFO interrupt will occur when there are 3 or less empty words left in the FIFO.) The limit is set to 5 words because Bluetooth audio data is transferred in packages composed of 10 or multiples of 10 bytes.

18.7 DMA SUPPORT

The CVSD module can operate with any of four DMA channels. Four DMA channels are required for processor independent operation. Both receive and transmit for CVSD data and PCM data can be enabled individually. The CVSD/PCM module asserts a DMA request to the on-chip DMA controller under the following conditions:

- The DMAPO bit is set and the PCMOUT register is full, because it has been updated by the converter core with a new PCM sample. (The DMA controller can read out one PCM data word from the PCMOUT register.)
- The DMAPI bit is set and the PCMIN register is empty, because it has been read by the converter core. (The DMA controller can write one new PCM data word into the PCMIN register.)
- The DMACO bit is set and a new 16-bit CVSD data stream has been copied into the CVSD Out FIFO. (The DMA controller can read out one 16-bit CVSD data word from the CVSD Out FIFO.)
- The DMACI bit is set and a 16-bit CVSD data stream has been read from the CVSD In FIFO. (The DMA controller can write one new 16-bit CVSD data word into the CVSD In FIFO.)

The CVSD/PCM module only supports indirect DMA transfers. Therefore, transferring PCM data between the CVSD/PCM module and another on-chip module requires two bus cycles.

The trigger for DMA may also trigger an interrupt if the corresponding enable bits in the CVCTRL register is set. Therefore care must be taken when setting the desired interrupt and DMA enable bits. The following conditions must be avoided:

- Setting the PCMINT bit and either of the DMAPO or DMAPI bits.
- Setting the CVSDINT bit and either of the DMACO or DMACI bits.

18.8 FREEZE

The CVSD/PCM module provides support for an In-System-Emulator by means of a special FREEZE input. While FREEZE is asserted the module will exhibit the following behavior:

- CVSD In FIFO will not have data removed by the converter core.
- CVSD Out FIFO will not have data added by the converter core.
- PCM Out buffer will not be updated by the converter core.
- The Clear-on-Read function of the following status bits in the CVSTAT register is disabled:
  - PCMINT
  - CVE
  - CVF

18.9 CVSD/PCM CONVERTER REGISTERS

Table 58 lists the CVSD/PCM registers.

Table 58 CVSD/PCM Registers

Name	Address	Description
CVSDIN	FF FC20h	CVSD Data Input Register
CVSDOUT	FF FC22h	CVSD Data Output Register
PCMIN	FF FC24h	PCM Data Input Register
PCMOUT	FF FC26h	PCM Data Output Register
LOGIN	FF FC28h	Logarithmic PCM Data Input Register
LOGOUT	FF FC2Ah	Logarithmic PCM Data Output Register
LINEARIN	FF FC2Ch	Linear PCM Data Input Register

Table 58 CVSD/PCM Registers

Name	Address	Description
LINEAROUT	FF FC2Eh	Linear PCM Data Output Register
CVCTRL	FF FC30h	CVSD Control Register
CVSTAT	FF FC32h	CVSD Status Register

18.9.1 CVSD Data Input Register (CVSDIN)

The CVSDIN register is a 16-bit wide, write-only register. It is used to write CVSD data into the CVSD to PCM converter FIFO. The FIFO is 8 words deep. The CVSDIN bit 15 represents the CVSD data bit at $t = t_0$, CVSDIN bit 0 represents the CVSD data bit at $t = t_0$ - 250 ms.

15	0
CVSDIN	

18.9.2 CVSD Data Output Register (CVSDOUT)

The CVSDOUT register is a 16-bit wide read-only register. It is used to read the CVSD data from the PCM to CVSD converter. The FIFO is 8 words deep. Reading the CVSDOUT register after reset returns undefined data.

15	0
CVSDOUT	

18.9.3 PCM Data Input Register (PCMIN)

The PCMIN register is a 16-bit wide write-only register. It is used to write PCM data to the PCM to CVSD converter via the peripheral bus. It is double-buffered, providing a 125 µs period for an interrupt or DMA request to respond.

15	0
PCMIN	

18.9.4 PCM Data Output Register (PCMOUT)

The PCMOUT register is a 16-bit wide read-only register. It is used to read PCM data from the CVSD to PCM converter. It is double-buffered, providing a 125 µs period for an interrupt or DMA request to respond. After reset the PCMOUT register is clear.

15	0
PCMOUT	

18.9.5 Logarithmic PCM Data Input Register (LOGIN)

The LOGIN register is an 8-bit wide write-only register. It is used to receive 8-bit logarithmic PCM data from the peripheral bus and convert it into 13-bit linear PCM data.

7	0
LOGIN	

18.9.6 Logarithmic PCM Data Output Register (LOGOUT)

The LOGOUT register is an 8-bit wide read-only register. It holds logarithmic PCM data that has been converted from linear PCM data. After reset, the LOGOUT register is clear.

7	0
LOGOUT	

18.9.7 Linear PCM Data Input Register (LINEARIN)

The LINEARIN register is a 16-bit wide write-only register. The data is left-aligned. When converting to A-law, bits 2:0 are ignored. When converting to µ-law, bits 1:0 are ignored.

15	0
LINEARIN	

18.9.8 Linear PCM Data Output Register (LINEAROUT)

The LINEAROUT register is a 16-bit wide read-only register. The data is left-aligned. When converting from A-law, bits 2:0 are clear. When converting from µ-law, bits 1:0 are clear. After reset, this register is clear.

15	0
LINEAROUT	

18.9.9 CVSD Control Register (CVCTRL)

The CVCTRL register is a 16-bit wide, read/write register that controls the mode of operation and of the module's interrupts. At reset, all implemented bits are cleared.

7	6	5	4	3	2	1	0
DMA PO	DMA CI	DMA CO	CVSD ERR-INT	CVSD INT	PCM INT	CLK EN	CVEN

15 14	13	12	11	10	9	8
Res.	RESOLUTION		PCMCONV	CVSDCONV		DMAPI

CVEN — The Module Enable bit enables or disables the CVSD conversion module interface. When the bit is set, the interface is enabled which allows read and write operations to the rest of the module. When the bit is clear, the module is disabled. When the module is disabled the status register CVSTAT will be cleared to its reset state.
0 – CVSD module enabled.
1 – CVSD module disabled.

CLKEN — The CVSD Clock Enable bit enables the 2-MHz clock to the filter engine and CVSD encoders and decoders.
0 – CVSD module clock disabled.
1 – CVSD module clock enabled.

PCMINT — The PCM Interrupt Enable bit controls generation of the PCM interrupt. If set, this bit enables the PCM interrupt. If the PCMINT bit is clear, the PCM interrupt is disabled. After reset, this bit is clear.
0 – PCM interrupt disabled.
1 – PCM interrupt enabled.

CVSDINT — The CVSD FIFO Interrupt Enable bit controls generation of the CVSD interrupt. If set, this bit enables the CVSD interrupt that occurs if the CVSD In FIFO is nearly empty or the CVSD Out FIFO is nearly full. If the CVSDINT bit is clear, the CVSD nearly full/nearly empty interrupt is disabled. After reset, this bit is clear.
0 – CVSD interrupt disabled.
1 – CVSD interrupt enabled.

CVSDERRINT — The CVSD FIFO Error Interrupt Enable bit controls generation of the CVSD error interrupt. If set, this bit enables an interrupt to occur when the CVSD Out FIFO is full or the CVSD In FIFO is empty. If the CVSDERRORINT bit is clear, the CVSD full/empty interrupt is disabled. After reset, this bit is clear.
0 – CVSD error interrupt disabled.
1 – CVSD error interrupt enabled.

DMACO — The DMA Enable for CVSD Out bit enables hardware DMA control for reading CVSD data from the CVSD Out FIFO. If clear, DMA support is disabled. After reset, this bit is clear.
0 – CVSD output DMA disabled.
1 – CVSD output DMA enabled.

DMACI — The DMA Enable for CVSD In bit enables hardware DMA control for writing CVSD data into the CVSD In FIFO. If clear, DMA support is disabled. After reset, this bit is clear.
0 – CVSD input DMA disabled.
1 – CVSD input DMA enabled.

DMAPO — The DMA Enable for PCM Out bit enables hardware DMA control for reading PCM data from the PCMOUT register. If clear, DMA support is disabled. After reset, this bit is clear.
0 – PCM output DMA disabled.
1 – PCM output DMA enabled.

DMAPI The DMA Enable for PCM In bit enables hardware DMA control for writing PCM data into the PCMIN register. If cleared, DMA support is disabled. After reset, this bit is clear.
0 – PCM input DMA disabled.
1 – PCM input DMA enabled.

CVSDCONV The CVSD to PCM Conversion Format field specifies the PCM format for CVSD/PCM conversions. After reset, this field is clear.
00 – CVSD <-> 8-bit µ-Law PCM.
01 – CVSD <-> 8-bit A-Law PCM.
10 – CVSD <-> Linear PCM.
11 – Reserved.

PCMCONV The PCM to PCM Conversion Format bit selects the PCM format for PCM/PCM conversions.
0 – Linear PCM <-> 8-bit µ-Law PCM
1 – Linear PCM <-> 8-bit A-Law PCM

RESOLUTION The Linear PCM Resolution field specifies the attenuation of the PCM data for the linear PCM to CVSD conversions by right shifting and sign extending the data. This affects the log PCM data as well as the linear PCM data. The log data is converted to either left-justified zero-stuffed 13-bit (A-law) or 14-bit (u-law). The RESOLUTION field can be used to compensate for any change in average levels resulting from this conversion. After reset, these two bits are clear.
00 – No shift.
01 – 1-bit attentuation.
10 – 2-bit attentuation.
11 – 3-bit attentuation.

18.9.10 CVSD Status Register (CVSTAT)

The CVSTAT register is a 16-bit wide, read-only register that holds the status information of the CVSD/PCM module. At reset, and if the CVCTL1.CVEN bit is clear, all implemented bits are cleared.

7 – 5	4	3	2	1	0
CVINST	CVF	CVE	PCMINT	CVNF	CVNE

15 – 11	10 – 8
Reserved	CVOUTST

CVNE The CVSD In FIFO Nearly Empty bit indicates when only three CVSD data words are left in the CVSD In FIFO, so new CVSD data should be written into the CVSD In FIFO. If the CVSDINT bit is set, an interrupt will be asserted when the CVNE bit is set. If the DMACI bit is set, a DMA request will be asserted when this bit is set. The CVNE bit is cleared when the CVSTAT register is read.
0 – CVSD In FIFO is not nearly empty.
1 – CVSD In FIFO is nearly empty.

CVNF The CVSD Out FIFO Nearly Full bit indicates when only three empty word locations are left in the CVSD Out FIFO, so the CVSD Out FIFO should be read. If the CVSDINT bit is set, an interrupt will be asserted when the CVNF bit is set. If the DMACO bit is set, a DMA request will be asserted when this bit is set. Software *must not* rely on the CVNF bit as an indicator of the number of valid words in the FIFO. Software *must* check the CVOUTST field to read the number of valid words in the FIFO. The CVNF bit is cleared when the CVSTAT register is read.
0 – CVSD Out FIFO is not nearly full.
1 – CVSD Out FIFO is nearly full.

PCMINT The PCM Interrupt bit set indicates that the PCMOUT register is full and needs to be read or the PCMIN register is empty and needs to be loaded with new PCM data. The PCMINT bit is cleared when the CVSTAT register is read, unless the device is in FREEZE mode.
0 – PCM does not require service.
1 – PCM requires loading or unloading.

CVE The CVSD In FIFO Empty bit indicates when the CVSD In FIFO has been read by the CVSD converter while the FIFO was already empty. If the CVSDERRORINT bit is set, an interrupt will be asserted when the CVE bit is set. The CVE bit is cleared when the CVSTAT register is read, unless the device is in FREEZE mode.
0 – CVSD In FIFO has not been read while empty.
1 – CVSD In FIFO has been read while empty.

CVF The CVSD Out FIFO Full bit set indicates whether the CVSD Out FIFO has been written by the CVSD converter while the FIFO was already full. If the CVSDERRORINT bit is set, an interrupt will be asserted when the CVF bit is set. The CVF bit is cleared when the CVSTAT register is read, unless the device is in FREEZE mode.
0 – CVSD Out FIFO has not been written while full.
1 – CVSD Out FIFO has been written while full.

CVINST The CVSD In FIFO Status field reports the current number of empty 16-bit word locations in the CVSD In FIFO. When the FIFO is empty, the CVINST field will read as 111b. When the FIFO holds 7 or 8 words of data, the CVINST field will read as 000b.

CVOUTST CVSD Out FIFO Status field reports the current number of valid 16-bit CVSD data words in the CVSD Out FIFO. When the FIFO is empty, the CVOUTST field will read as 000b. When the FIFO holds 7 or 8 words of data, the CVOUTST field will read as 111b.

19.0 UART Module

The UART module is a full-duplex Universal Asynchronous Receiver/Transmitter that supports a wide range of software-programmable baud rates and data formats. It handles automatic parity generation and several error detection schemes.

The UART module offers the following features:

- Full-duplex double-buffered receiver/transmitter
- Synchronous or asynchronous operation
- Programmable baud rate
- Programmable framing formats: 7, 8, or 9 data bits; even, odd, or no parity; one or two stop bits (mark or space)
- Hardware parity generation for data transmission and parity check for data reception
- Interrupts on “transmit ready” and “receive ready” conditions, separately enabled
- Software-controlled break transmission and detection
- Internal diagnostic capability
- Automatic detection of parity, framing, and overrun errors
- Hardware flow control ($\overline{CTS}$ and $\overline{RTS}$ signals)
- DMA capability

19.1 FUNCTIONAL OVERVIEW

Figure 67 is a block diagram of the UART module showing the basic functional units in the UART:

- Transmitter
- Receiver
- Baud Rate Generator
- Control and Error Detection

The Transmitter block consists of an 8-bit transmit shift register and an 8-bit transmit buffer. Data bytes are loaded in parallel from the buffer into the shift register and then shifted out serially on the TXD pin.

The Receiver block consists of an 8-bit receive shift register and an 8-bit receive buffer. Data is received serially on the RXD pin and shifted into the shift register. Once eight bits have been received, the contents of the shift register are transferred in parallel to the receive buffer.

The Transmitter and Receiver blocks both contain extensions for 9-bit data transfers, as required by the 9-bit and loopback operating modes.

The Baud Rate Generator generates the clock for the synchronous and asynchronous operating modes. It consists of two registers and a two-stage counter. The registers are used to specify a prescaler value and a baud rate divisor. The first stage of the counter divides the UART clock based on the value of the programmed prescaler to create a slower clock. The second stage of the counter creates the baud rate clock by dividing the output of the first stage based on the programmed baud rate divisor.

The Control and Error Detection block contains the UART control registers, control logic, error detection circuit, parity generator/checker, and interrupt generation logic. The control registers and control logic determine the data format, mode of operation, clock source, and type of parity used. The error detection circuit generates parity bits and checks for parity, framing, and overrun errors.

The Flow Control Logic block provides the capability for hardware handshaking between the UART and a peripheral device. When the peripheral device needs to stop the flow of data from the UART, it de-asserts the clear-to-send ($\overline{CTS}$) signal which causes the UART to pause after sending the current frame (if any). The UART asserts the ready-to-send ($\overline{RTS}$) signal to the peripheral when it is ready to send a character.

19.2 UART OPERATION

The UART has two basic modes of operation: synchronous and asynchronous. Synchronous mode is only supported on 100-pin devices. In addition, there are two special-purpose modes, called attention and diagnostic. This section describes the operating modes of the UART.

19.2.1 Asynchronous Mode

The asynchronous mode of the UART enables the device to communicate with other devices using just two communication signals: transmit and receive.

In asynchronous mode, the transmit shift register (TSFT) and the transmit buffer (UTBUF) double-buffer the data for transmission. To transmit a character, a data byte is loaded in the UTBUF register. The data is then transferred to the TSFT register. While the TSFT register is shifting out the current character (LSB first) on the TXD pin, the UTBUF register is loaded by software with the next byte to be transmitted. When TSFT finishes transmission of the last stop bit of the current frame, the contents of UTBUF are transferred to the TSFT register and the Transmit Buffer Empty bit (UTBE) is set. The UTBE bit is automatically cleared by the UART when software loads a new character into the UTBUF register. During transmission, the UXMIP bit is set high by the UART. This bit is reset only after the UART has sent the last stop bit of the current character and the UTBUF register is empty. The UTBUF register is a read/write register. The TSFT register is not software accessible.

In asynchronous mode, the input frequency to the UART is 16 times the baud rate. In other words, there are 16 clock cycles per bit time. In asynchronous mode, the baud rate generator is always the UART clock source.

The receive shift register (RSFT) and the receive buffer (URBUF) double buffer the data being received. The UART receiver continuously monitors the signal on the RXD pin for a low level to detect the beginning of a start bit. On sensing this low level, the UART waits for seven input clock cycles and samples again three times. If all three samples still indicate a valid low, then the receiver considers this to be a valid start bit, and the remaining bits in the character frame are each sampled three times, around the mid-bit position. For any bit following the start bit, the logic value is found by majority voting, i.e. the two samples with the same value define the value of the data bit. Figure 68 illustrates the process of start bit detection and bit sampling.

Data bits are sensed by taking a majority vote of three samples latched near the midpoint of each baud (bit time). Normally, the position of the samples within the baud is determined automatically, but software can override the au-

tomatic selection by setting the USMD bit in the UMDSL2 register and programming the USPOS register.

Serial data input on the RXD pin is shifted into the RSFT register. On receiving the complete character, the contents of the RSFT register are copied into the URBUF register and the Receive Buffer Full bit (URBF) is set. The URBF bit is automatically reset when software reads the character from the URBUF register. The RSFT register is not software accessible.

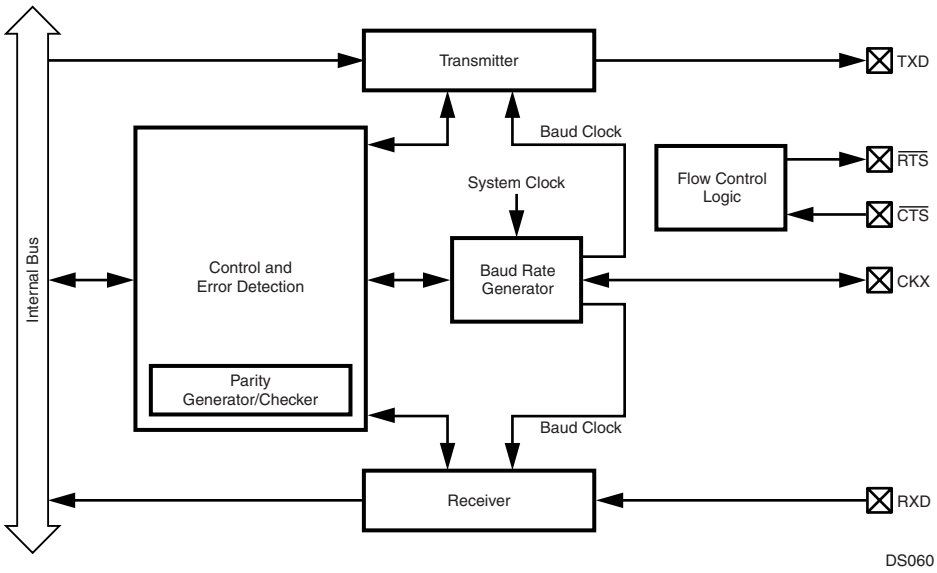

Figure 67. UART Block Diagram

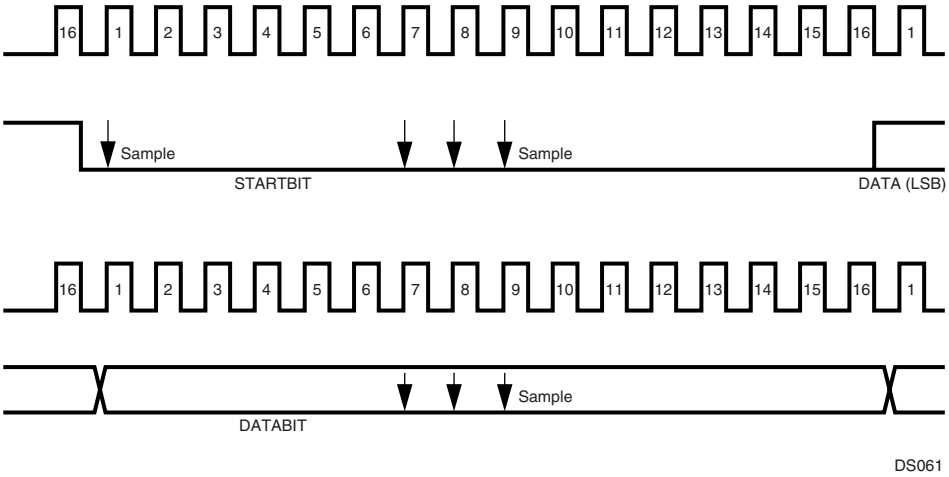

Figure 68. UART Asynchronous Communication

19.2.2 Synchronous Mode

The synchronous mode of the UART enables the device to communicate with other devices using three communication signals: transmit, receive, and clock. In this mode, data bits are transferred synchronously with the UART clock signal. Data bits are transmitted on the rising edges and received on the falling edges of the clock signal, as shown in Figure 69. Data bytes are transmitted and received least significant bit (LSB) first.

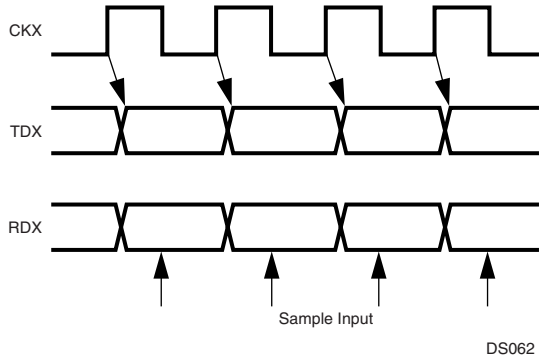

Figure 69. UART Synchronous Communication

In synchronous mode, the transmit shift register (TSFT) and the transmit buffer (UTBUF) double-buffer the data for transmission. To transmit a character, a data byte is loaded in the UTBUF register. The data is then transferred to the TSFT register. The TSFT register shifts out one bit of the current character, LSB first, on each rising edge of the clock. While the TSFT is shifting out the current character on the TXD pin, the UTBUF register may be loaded by software with the next byte to be transmitted. When the TSFT finishes transmission of the last stop bit within the current frame, the contents of UTBUF are transferred to the TSFT register and the Transmit Buffer Empty bit (UTBE) is set. The UTBE bit is automatically reset by the UART when software loads a new character into the UTBUF register. During transmission, the UXMIP bit is set by the UART. This bit is cleared only after the UART has sent the last frame bit of the current character and the UTBUF register is empty.

The receive shift register (RSFT) and the receive buffer (URBUF) double-buffer the data being received. Serial data received on the RXD pin is shifted into the RSFT register on the first falling edge of the clock. Each subsequent falling edge of the clock causes an additional bit to be shifted into the RSFT register. The UART assumes a complete character has been received after the correct number of rising edges on CKX (based on the selected frame format) have been detected. On receiving a complete character, the contents of the RSFT register are copied into the URBUF register and the Receive Buffer Full bit (URBF) is set. The URBF bit is automatically reset when software reads the character from the URBUF register.

The transmitter and receiver may be clocked by either an external source provided to the CKX pin or the internal baud rate generator. In the latter case, the clock signal is placed on the CKX pin as an output.

19.2.3 Attention Mode

The Attention mode is available for networking this device with other processors. This mode requires the 9-bit data format with no parity. The number of start bits and number of stop bits are programmable. In this mode, two types of 9-bit characters are sent on the network: address characters consisting of 8 address bits and a 1 in the ninth bit position and data characters consisting of 8 data bits and a 0 in the ninth bit position.

While in Attention mode, the UART receiver monitors the communication flow but ignores all characters until an address character is received. On receiving an address character, the contents of the receive shift register are copied to the receive buffer. The URBF bit is set and an interrupt (if enabled) is generated. The UATN bit is automatically cleared, and the UART begins receiving all subsequent characters. Software must examine the contents of the URBUF register and respond by accepting the subsequent characters (by leaving the UATN bit reset) or waiting for the next address character (by setting the UATN bit again).

The operation of the UART transmitter is not affected by the selection of this mode. The value of the ninth bit to be transmitted is programmed by setting or clearing the UXB9 bit in the UART Frame Select register. The value of the ninth bit received is read from URB9 in the UART Status Register.

19.2.4 Diagnostic Mode

The Diagnostic mode is available for testing of the UART. In this mode, the TXD and RXD pins are internally connected together, and data shifted out of the transmit shift register is immediately transferred to the receive shift register. This mode supports only the 9-bit data format with no parity. The number of start and stop bits is programmable.

19.2.5 Frame Format Selection

The format shown in Figure 70 consists of a start bit, seven data bits (excluding parity), and one or two stop bits. If parity bit generation is enabled by setting the UPEN bit, a parity bit is generated and transmitted following the seven data bits.

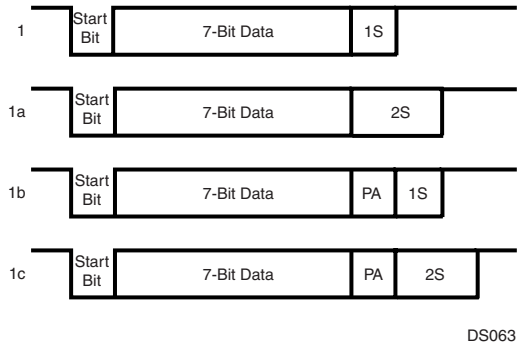

Figure 70. 7-Bit Data Frame Options

The format shown in Figure 71 consists of one start bit, eight data bits (excluding parity), and one or two stop bits. If parity bit generation is enabled by setting the UPEN bit, a

parity bit is generated and transmitted following the eight data bits.

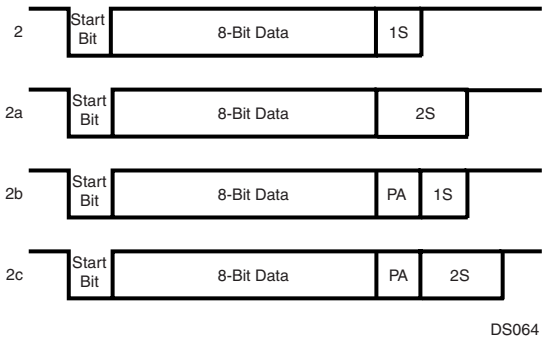

Figure 71. 8-Bit Data Frame Options

The format shown in Figure 72 consists of one start bit, nine data bits, and one or two stop bits. This format also supports the UART attention feature. When operating in this format, all eight bits of UTBUF and URBUF are used for data. The ninth data bit is transmitted and received using two bits in the control registers, called UXB9 and URB9. Parity is not generated or verified in this mode.

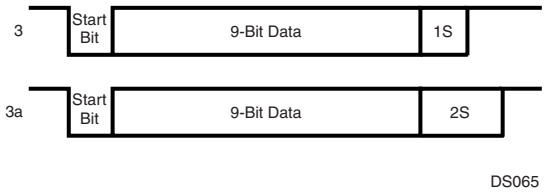

Figure 72. 9-bit Data Frame Options

19.2.6 Baud Rate Generator

The Baud Rate Generator creates the basic baud clock from the System Clock. The System Clock is passed through a two-stage divider chain consisting of a 5-bit baud rate prescaler (UPSC) and an 11-bit baud rate divisor (UDIV).

The relationship between the 5-bit prescaler select (UPSC) setting and the prescaler factors is shown in Table 59.

Table 59 Prescaler Factors

Prescaler Select	Prescaler Factor
00000	No clock
00001	1
00010	1.5
00011	2
00100	2.5
00101	3
00110	3.5
00111	4
01000	4.5
01001	5
01010	5.5

Table 59 Prescaler Factors (Continued)

Prescaler Select	Prescaler Factor
01011	6
01100	6.5
01101	7
01110	7.5
01111	8
10000	8.5
10001	9
10010	9.5
10011	10
10100	10.5
10101	11
10110	11.5
10111	12
11000	12.5
11001	13
11010	13.5
11011	14
11100	14.5
11101	15
11110	15.5
11111	16

A prescaler factor of zero corresponds to “no clock.” The “no clock” condition is the UART power down mode, in which the UART clock is turned off to reduce power consumption. Software must select the “no clock” condition before entering a new baud rate. Otherwise, it could cause incorrect data to be received or transmitted. The UPSR register must contain a value other than zero when an external clock is used at CKX.

19.2.7 Interrupts

The UART is capable of generating interrupts on:

- Receive Buffer Full
- Receive Error
- Transmit Buffer Empty

Figure 73 shows a diagram of the interrupt sources and associated enable bits.

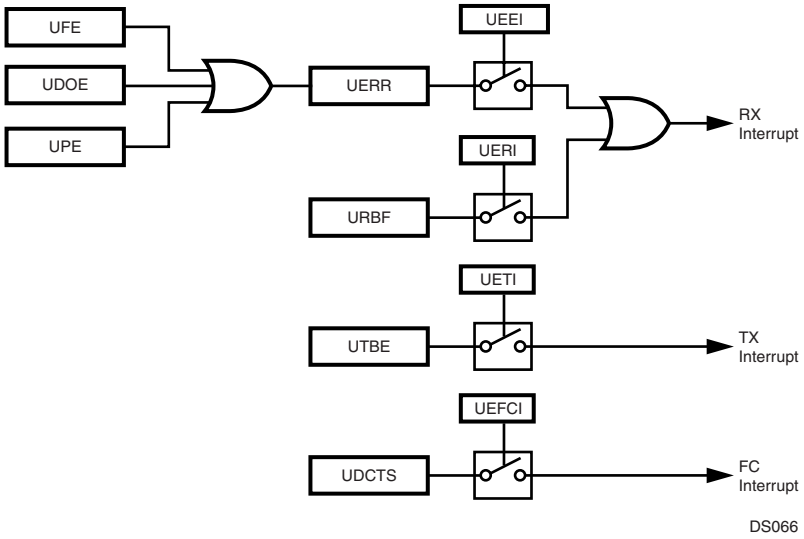

Figure 73. UART Interrupts

The interrupts can be individually enabled or disabled using the Enable Transmit Interrupt (UETI), Enable Receive Interrupt (UERI), and Enable Receive Error Interrupt (UEER) bits in the UICTRL register.

A transmit interrupt is generated when both the UTBE and UETI bits are set. To remove this interrupt, software must either disable the interrupt by clearing the UETI bit or write to the UTBUF register (which clears the UTBE bit).

A receive interrupt is generated on these conditions:

- Both the URBF and UERI bits are set. To remove this interrupt, software must either disable the interrupt by clearing the UERI bit or read from the URBUF register (which clears the URBF bit).
- Both the UERR and the UEEI bits are set. To remove this interrupt, software must either disable the interrupt by clearing the UEEI bit or read the USTAT register (which clears the UERR bit).

A flow control interrupt is generated when both the UDCTS and the UEFCI bits are set. To remove this interrupt, software must either disable the interrupt by clearing the UEFCI bit or read the UICTRL register (which clears the UDCTS bit).

In addition to the dedicated inputs to the ICU for UART interrupts, the UART receive (RXD) and Clear To Send ($\overline{CTS}$) signals are inputs to the MIWU (see Section 13.0), which can be programmed to generate edge-triggered interrupts.

19.2.8 DMA Support

The UART can operate with one or two DMA channels. Two DMA channels must be used for processor-independent full-duplex operation. Both receive and transmit DMA can be enabled simultaneously.

If transmit DMA is enabled (the UETD bit is set), the UART generates a DMA request when the UTBE bit changes state from clear to set. Enabling transmit DMA automatically disables transmit interrupts, without regard to the state of the UETI bit.

If receive DMA is enabled (the UERD bit is set), the UART generates a DMA request when the URBF bit changes state from clear to set. Enabling receive DMA automatically disables receive interrupts, without regard to the state of the UERI bit. However, receive error interrupts should be enabled (the UEEI bit is set) to allow detection of receive errors when DMA is used.

19.2.9 Break Generation and Detection

A line break is generated when the UBRK bit is set in the UMDSL1 register. The TXD line remains low until the program resets the UBRK bit.

A line break is detected if RXD remains low for 10 bit times or longer after a missing stop bit is detected.

19.2.10 Parity Generation and Detection

Parity is only generated or checked with the 7-bit and 8-bit data formats. It is not generated or checked in the diagnostic loopback mode, the attention mode, or in normal mode with the 9-bit data format. Parity generation and checking are enabled and disabled using the PEN bit in the UFRS register. The UPSEL bits in the UFRS register are used to select odd, even, or no parity.

19.3 UART REGISTERS

Software interacts with the UART by accessing the UART registers. There are eight registers, as listed in Table 60.

Table 60 UART Registers

Name	Address	Description
URBUF	FF FE42h	UART Receive Data Buffer
UTBUF	FF FE40h	UART Transmit Data Buffer
UPSR	FF FE4Eh	UART Baud Rate Prescaler
UBAUD	FF FE4Ch	UART Baud Rate Divisor
UFRS	FF FE48h	UART Frame Select Register
UMDSL1	FF FE4Ah	UART Mode Select Register 1
USTAT	FF FE46h	UART Status Register
UICTRL	FF FE44h	UART Interrupt Control Register
UOVR	FF FE50h	UART Oversample Rate Register
UMDSL2	FF FE52h	UART Mode Select Register 2
USPOS	FF FE54h	UART Sample Position Register

19.3.1 UART Receive Data Buffer (URBUF)

The URBUF register is a byte-wide, read/write register used to receive each data byte.

7	0
URBUF	

19.3.2 UART Transmit Data Buffer (UTBUF)

The UTBUF register is a byte-wide, read/write register used to transmit each data byte.

7	0
UTBUF	

19.3.3 UART Baud Rate Prescaler (UPSR)

The UPSR register is a byte-wide, read/write register that contains the 5-bit clock prescaler and the upper three bits of the baud rate divisor. This register is cleared upon reset. The register format is shown below.

7 3	2 0
UPSC	UDIV10:8

UPSC The Prescaler field specifies the prescaler value used for dividing the System Clock in the first stage of the two-stage divider chain. For the prescaler factors corresponding to each 5-bit value, see Table 59.

UDIV10:8 The Baud Rate Divisor field holds the three most significant bits (bits 10, 9, and 8) of the UART baud rate divisor used in the second stage of the two-stage divider chain. The remaining bits of the baud rate divisor are held in the UBAUD register.

19.3.4 UART Baud Rate Divisor (UBAUD)

The UBAUD register is a byte-wide, read/write register that contains the lower eight bits of the baud rate divisor. The register contents are unknown at power-up and are left unchanged by a reset operation. The register format is shown below.

7	0
UDIV7:0	

UDIV7:0 The Baud Rate Divisor field holds the eight lowest-order bits of the UART baud rate divisor used in the second stage of the two-stage divider chain. The three most significant bits are held in the UPSR register. The divisor value used is (UDIV[10:0] + 1).

19.3.5 UART Frame Select Register (UFRS)

The UFRS register is a byte-wide, read/write register that controls the frame format, including the number of data bits, number of stop bits, and parity type. This register is cleared upon reset. The register format is shown below.

7	6	5 4	3	2	1 0
Reserved	UPEN	UPSEL	UXB9	USTP	UCHAR

UCHAR The Character Frame Format field selects the number of data bits per frame, not including the parity bit, as follows:
00 – 8 data bits per frame.
01 – 7 data bits per frame.
10 – 9 data bits per frame.
11 – Loop-back mode, 9 data bits per frame.

USTP — The Stop Bits bit specifies the number of stop bits transmitted in each frame. If this bit is 0, one stop bit is transmitted. If this bit is 1, two stop bits are transmitted.
0 – One stop bit per frame.
1 – Two stop bits per frame.

UXB9 — The Transmit 9th Data Bit holds the value of the ninth data bit, either 0 or 1, transmitted when the UART is configured to transmit nine data bits per frame. It has no effect when the UART is configured to transmit seven or eight data bits per frame.

UPSEL — The Parity Select field selects the treatment of the parity bit. When the UART is configured to transmit nine data bits per frame, the parity bit is omitted and the UPSEL field is ignored.
00 – Odd parity.
01 – Even parity.
10 – No parity, transmit 1 (mark).
11 – No parity, transmit 0 (space).

UPEN — The Parity Enable bit enables or disables parity generation and parity checking. When the UART is configured to transmit nine data bits per frame, there is no parity bit and the UPEN bit is ignored.
0 – Parity generation and checking disabled.
1 – Parity generation and checking enabled.

19.3.6 UART Mode Select Register 1 (UMDSL1)

The UMDSL1 register is a byte-wide, read/write register that selects the clock source, synchronization mode, attention mode, and line break generation. This register is cleared at reset. The register format is shown below.

7	6	5	4	3	2	1	0
URTS	UFCE	UERD	UETD	UCKS	UBRK	UATN	UMOD

UMOD — The Mode bit selects between synchronous and asynchronous mode.
0 – Asynchronous mode.
1 – Synchronous mode.

UATN — The Attention Mode bit is used to enable Attention mode. When set, this bit selects the attention mode of operation for the UART. When clear, the attention mode is disabled. The hardware clears this bit after an address frame is received. An address frame is a 9-bit character with a 1 in the ninth bit position.
0 – Attention mode disabled.
1 – Attention mode enabled.

UBRK — The Force Transmission Break bit is used to force the TXD output low. Setting this bit to 1 causes the TXD pin to go low. TXD remains low until the UBRK bit is cleared by software.
0 – Normal operation.
1 – TXD pin forced low.

UCKS — The Synchronous Clock Source bit controls the clock source when the UART operates in the synchronous mode (UMOD = 1). If the UCKS bit is set, the UART operates from an external clock provided on the CKX pin. If the UCKS bit is clear, the UART operates from the baud rate clock produced by the UART on the CKX pin. This bit is ignored when the UART operates in the asynchronous mode.
0 – Internal baud rate clock is used.
1 – External clock is used.

UETD — The Enable Transmit DMA bit controls whether DMA is used for UART transmit operations. Enabling transmit DMA automatically disables transmit interrupts, without regard to the state of the UETI bit.
0 – Transmit DMA disabled.
1 – Transmit DMA enabled.

UERD — The Enable Receive DMA bit controls whether DMA is used for UART receive operations. Enabling receive DMA automatically disables receive interrupts, without regard to the state of the UERI bit. Receive error interrupts are unaffected by the UERD bit.
0 – Receive DMA disabled.
1 – Receive DMA enabled.

UFCE — The Flow Control Enable bit controls whether flow control interrupts are enabled.
0 – Flow control interrupts disabled.
1 – Flow control interrupts enabled.

URTS — The Ready To Send bit directly controls the state of the $\overline{RTS}$ output.
0 – $\overline{RTS}$ output is high.
1 – $\overline{RTS}$ output is low.

19.3.7 UART Status Register (USTAT)

The USTAT register is a byte-wide, read-only register that contains the receive and transmit status bits. This register is cleared upon reset. Any attempt by software to write to this register is ignored. The register format is shown below.

7	6	5	4	3	2	1	0
Res.	UXMIP	URB9	UBKD	UERR	UDOE	UFE	UPE

UPE — The Parity Error bit indicates whether a parity error is detected within a received character. This bit is automatically cleared by the hardware when the USTAT register is read.
0 – No parity error occurred.
1 – Parity error occurred.

UFE — The Framing Error bit indicates whether the UART fails to receive a valid stop bit at the end of a frame. This bit is automatically cleared by the hardware when the USTAT register is read.
0 – No framing error occurred.
1 – Framing error occurred.

UDOE — The Data Overrun Error bit is set when a new character is received and transferred to the URBUF register before software has read the previous character from the URBUF register. This bit is automatically cleared by the hardware when the USTAT register is read.
0 – No receive overrun error occurred.
1 – Receive overrun error occurred.

UERR — The Error Status bit indicates when a parity, framing, or overrun error occurs (any time that the UPE, UFE, or UDOE bit is set). It is automatically cleared by the hardware when the UPE, UFE, and UDOE bits are all 0.
0 – No receive error occurred.
1 – Receive error occurred.

UBKD — The Break Detect bit indicates when a line break condition occurs. This condition is detected if RXD remains low for at least ten bit times after a missing stop bit has been detected at the end of a frame. The hardware automatically clears the UBKD bit upon read of the USTAT register, but only if the break condition on RXD no longer exists. If reading the USTAT register does not clear the UBKD bit because the break is still actively driven on the line, the hardware clears the bit as soon as the break condition no longer exists (when the RXD input returns to a high level).
0 – No break condition occurred.
1 – Break condition occurred.

URB9 — The Received 9th Data Bit holds the ninth data bit, when the UART is configured to operate in the 9-bit data format.

UXMIP — The Transmit In Progress bit indicates when the UART is transmitting. The hardware sets this bit when the UART is transmitting data and clears the bit at the end of the last frame bit.
0 – UART is not transmitting.
1 – UART is transmitting.

19.3.8 UART Interrupt Control Register (UICTRL)

The UICTRL register is a byte-wide register that contains the receive and transmit interrupt status bits (read-only bits) and the interrupt enable bits (read/write bits). The register is initialized to 01h at reset. The register format is shown below.

7	6	5	4	3	2	1	0
UEEI	UERI	UETI	UEFCI	UCTS	UDCTS	URBF	UTBE

UTBE — The Transmit Buffer Empty bit is set by hardware when the UART transfers data from the UTBUF register to the transmit shift register for transmission. It is automatically cleared by the hardware on the next write to the UTBUF register.
0 – Transmit buffer is loaded.
1 – Transmit buffer is empty.

URBF — The Receive Buffer Full bit is set by hardware when the UART has received a complete data frame and has transferred the data from the receive shift register to the URBUF register. It is automatically cleared by the hardware when the URBUF register is read.
0 – Receive buffer is empty.
1 – Receive buffer is loaded.

UDCTS — The Delta Clear To Send bit indicates whether the $\overline{CTS}$ input has changed state since the CPU last read this register.
0 – No change since last read.
1 – State has changed since last read.

UCTS — The Clear To Send bit indicates the state on the $\overline{CTS}$ input.
0 – $\overline{CTS}$ input is high.
1 – $\overline{CTS}$ input is low.

UEFCI — The Enable Flow Control Interrupt bit controls whether a flow control interrupt is generated when the UDCTS bit changes from clear to set.
0 – Flow control interrupt disabled.
1 – Flow control interrupt enabled.

UETI — The Enable Transmitter Interrupt bit, when set, enables generation of an interrupt when the hardware sets the UTBE bit.
0 – Transmit buffer empty interrupt disabled.
1 – Transmit buffer empty interrupt enabled.

UERI — The Enable Receiver Interrupt bit, when set, enables generation of an interrupt when the hardware sets the URBF bit.
0 – Receive buffer full interrupt disabled.
1 – Receive buffer full interrupt enabled.

UEEI — The Enable Receive Error Interrupt bit, when set, enables generation of an interrupt when the hardware sets the UERR bit in the USTAT register.
0 – Receive error interrupt disabled.
1 – Receive error interrupt enabled.

19.3.9 UART Oversample Rate Register (UOVR)

The UOVR register is a byte-wide, read/write register that specifies the oversample rate. At reset, the UOVR register is cleared. The register format is shown below.

7 – 4	3 – 0
Reserved	UOVSR

UOVSR — The Oversampling Rate field specifies the oversampling rate, as given in the following table.

UOVSR3:0	Oversampling Rate
0000–0110	16
0111	7
1000	8
1001	9
1010	10
1011	11
1100	12
1101	13
1110	14
1111	15

19.3.10 UART Mode Select Register 2 (UMDSL2)

The UMDSL2 register is a byte-wide, read/write register that controls the sample mode used to recover asynchronous data. At reset, the UOVR register is cleared. The register format is shown below.

7 – 1	0
Reserved	USMD

USMD — The USMD bit controls the sample mode for asynchronous transmission.
0 – UART determines the sample position automatically.
1 – The USPOS register determines the sample position.

19.3.11 UART Sample Position Register (USPOS)

The USPOS register is a byte-wide, read/write register that specifies the sample position when the USMD bit in the UMDSL2 register is set. At reset, the USPOS register is initialized to 06h. The register format is shown below.

7 – 4	3 – 0
Reserved	USAMP

USAMP — The Sample Position field specifies the oversample clock period at which to take the first of three samples for sensing the value of data bits. The clocks are numbered starting at 0 and may range up to 15 for 16× oversampling. The maximum value for this field is (oversampling rate - 3). The table below shows the clock period at which each of the three samples is taken, when automatic sampling is enabled (UMDSL2.USMD = 0).

Oversampling Rate	Sample Position		
	1	2	3
7	2	3	4
8	2	3	4
9	3	4	5
10	3	4	5
11	4	5	6
12	4	5	6
13	5	6	7
14	5	6	7
15	6	7	8
16	6	7	8

The USAMP field may be used to override the automatic selection, to choose any other clock period at which to start taking the three samples.

19.4 BAUD RATE CALCULATIONS

The UART baud rate is determined by the System Clock frequency and the values in the UOVR, UPSR, and UBAUD registers. Unless the System Clock is an exact multiple of the baud rate, there will be a small amount of error in the resulting baud rate.

19.4.1 Asynchronous Mode

The equation to calculate the baud rate in asynchronous mode is:

$$BR = \frac{SYS_CLK}{(O \times N \times P)}$$

where BR is the baud rate, SYS_CLK is the System Clock, O is the oversample rate, N is the baud rate divisor + 1, and P is the prescaler divisor selected by the UPSR register.

Assuming a System Clock of 5 MHz, a desired baud rate of 9600, and an oversample rate of 16, the N × P term according to the equation above is:

$$N \times P = \frac{(5 \times 10^6)}{(16 \times 9600)} = 32.552$$

The N × P term is then divided by each Prescaler Factor from Table 59 to obtain a value closest to an integer. The factor for this example is 6.5.

$$N = \frac{32.552}{6.5} = 5.008 \quad (N = 5)$$

The baud rate register is programmed with a baud rate divisor of 4 (N = baud rate divisor + 1). This produces a baud clock of:

$$BR = \frac{(5 \times 10^6)}{(16 \times 5 \times 6.5)} = 9615.385$$

$$\%error = \frac{(9615.385 - 9600)}{9600} = 0.16$$

Note that the percent error is much lower than would be possible without the non-integer prescaler factor. Error greater than 3% is marginal and may result in unreliable operation. Refer to Table 61 below for more examples.

19.4.2 Synchronous Mode

When synchronous mode is selected and the UCKS bit is set, the UART operates from a clock received on the CKX pin. When the UCKS bit is clear, the UART uses the clock from the internal baud rate generator which is also driven on the CKX pin. When the internal baud rate generator is used, the equation for calculating the baud rate is:

$$BR = \frac{SYS_CLK}{(2 \times N \times P)}$$

where BR is the baud rate, SYS_CLK is the System Clock, N is the value of the baud rate divisor + 1, and P is the prescaler divide factor selected by the value in the UPSR register. Oversampling is not used in synchronous mode.

Use the same procedure to determine the values of N and P as in the asynchronous mode. In this case, however, only integer prescaler values are allowed.

Table 61 Baud Rate Programming

Baud Rate	SYS_CLK = 48 MHz				SYS_CLK = 24 MHz				SYS_CLK = 12 MHz				SYS_CLK = 10 MHz			
	O	N	P	%err	O	N	P	%err	O	N	P	%err	O	N	P	%err
300	16	2000	5.0	0.00	16	2000	2.5	0.00	16	1250	2.0	0.00	13	1282	2.0	0.00
600	16	2000	2.5	0.00	16	1250	2.0	0.00	16	1250	1.0	0.00	13	1282	1.0	0.00
1200	16	1250	2.0	0.00	16	1250	1.0	0.00	16	625	1.0	0.00	13	641	1.0	0.00
1800	7	401	9.5	0.00	8	1111	1.5	0.01	12	101	5.5	0.01	12	463	1.0	0.01
2000	16	1500	1.0	0.00	16	750	1.0	0.00	16	250	1.5	0.00	16	125	2.5	0.00
2400	16	1250	1.0	0.00	16	625	1.0	0.00	16	125	2.5	0.00	9	463	1.0	0.01
3600	8	1111	1.5	0.01	12	101	5.5	0.01	11	202	1.5	0.01	11	101	2.5	0.01
4800	16	625	1.0	0.00	16	125	2.5	0.00	10	250	1.0	0.00	7	119	2.5	0.04
7200	12	101	5.5	0.01	11	303	1.0	0.01	11	101	1.5	0.01	10	139	1.0	0.08
9600	16	125	2.5	0.00	10	250	1.0	0.00	10	125	1.0	0.00	7	149	1.0	0.13
14400	11	202	1.5	0.01	11	101	1.5	0.01	14	17	3.5	0.04	14	33	1.5	0.21
19200	10	250	1.0	0.00	10	125	1.0	0.00	10	25	2.5	0.00	16	13	2.5	0.16
38400	10	125	1.0	0.00	10	25	2.5	0.00	16	13	1.5	0.16	8	13	2.5	0.16
56000	7	49	2.5	0.04	13	33	1.0	0.10	13	11	1.5	0.10	7	17	1.5	0.04
115200	7	17	3.5	0.04	13	16	1.0	0.16	13	8	1.0	0.16	7	5	2.5	0.79
128000	15	25	1.0	0.00	15	5	2.5	0.00	11	1	8.5	0.27	12	1	6.5	0.16
230400	13	16	1.0	0.16	13	8	1.0	0.16	13	4	1.0	0.16	11	4	1.0	1.36
345600	9	1	15.5	0.44	10	7	1.0	0.79	10	1	3.5	0.79				
460800	13	8	1.0	0.16	13	4	1.0	0.16	13	2	1.0	0.16	11	2	1.0	1.36
576000	8	7	1.5	0.79	12	1	3.5	0.79	14	1	1.5	0.79	7	1	2.5	0.79
691200	10	7	1.0	0.79	10	1	3.5	0.79	7	1	2.5	0.79				
806400	7	1	8.5	0.04	15	2	1.0	0.79	10	1	1.5	0.79				
921600	13	4	1.0	0.16	13	2	1.0	0.16	13	1	1.0	0.16				
1105920	11	4	1.0	1.36	11	2	1.0	1.36					9	1	1.0	0.47
1382400	10	1	3.5	0.79	7	1	2.5	0.79								
1536000	9	1	3.5	0.79	8	2	1.0	2.34								

Table 62 Baud Rate Programming

Baud Rate	SYS_CLK = 8 MHz				SYS_CLK = 6 MHz				SYS_CLK = 5 MHz				SYS_CLK = 4 MHz			
	O	N	P	%err	O	N	P	%err	O	N	P	%err	O	N	P	%err
300	7	401	9.5	0.00	16	1250	1.0	0.00	11	202	7.5	0.01	12	202	5.5	0.01
600	12	1111	1.0	0.01	16	625	1.0	0.00	11	101	7.5	0.01	12	101	5.5	0.01
1200	12	101	5.5	0.01	16	125	2.5	0.00	10	119	3.5	0.04	11	202	1.5	0.01
1800	8	101	5.5	0.01	11	303	1.0	0.01	11	101	2.5	0.01	11	202	1.0	0.01
2000	16	250	1.0	0.00	16	125	1.5	0.00	10	250	1.0	0.00	16	125	1.0	0.00
2400	11	303	1.0	0.01	10	250	1.0	0.00	7	119	2.5	0.04	11	101	1.5	0.01
3600	11	202	1.0	0.01	11	101	1.5	0.01	10	139	1.0	0.08	11	101	1.0	0.01
4800	11	101	1.5	0.01	10	125	1.0	0.00	7	149	1.0	0.13	14	17	3.5	0.04
7200	11	101	1.0	0.01	14	17	3.5	0.04	14	33	1.5	0.21	15	37	1.0	0.10
9600	14	17	3.5	0.04	10	25	2.5	0.00	16	13	2.5	0.16	7	17	3.5	0.04
14400	15	37	1.0	0.10	7	17	3.5	0.04	7	33	1.5	0.21	9	31	1.0	0.44
19200	7	17	3.5	0.04	16	13	1.5	0.16	8	13	2.5	0.16	16	13	1.0	0.16
38400	16	13	1.0	0.16	8	13	1.5	0.16	13	10	1.0	0.16	16	1	6.5	0.16
56000	13	11	1.0	0.10	9	12	1.0	0.79	15	6	1.0	0.79	13	1	5.5	0.10
115200	10	7	1.0	0.79	13	4	1.0	0.16	11	4	1.0	1.36	10	1	3.5	0.79
128000	9	7	1.0	0.79	16	3	1.0	2.34	13	3	1.0	0.16	9	1	3.5	0.79
230400	10	1	3.5	0.79	13	2	1.0	0.16	11	2	1.0	1.36	7	1	2.5	0.79
345600	15	1	1.5	2.88	7	1	2.5	0.79								
460800	7	1	2.5	0.79	13	1	1.0	0.16								
576000	7	2	1.0	0.79	7	1	1.5	0.79								
Baud Rate	**SYS_CLK = 3 MHz**				**SYS_CLK = 2 MHz**				**SYS_CLK = 1 MHz**				**SYS_CLK = 500 kHz**			
	O	N	P	%err	O	N	P	%err	O	N	P	%err	O	N	P	%err
300	16	250	2.5	0.00	12	101	5.5	0.01	11	202	1.5	0.01	11	101	1.5	0.01
600	16	125	2.5	0.00	11	202	1.5	0.01	11	101	1.5	0.01	14	17	3.5	0.04
1200	10	250	1.0	0.00	11	101	1.5	0.01	14	17	3.5	0.04	7	17	3.5	0.04
1800	11	101	1.5	0.01	11	101	1.0	0.01	15	37	1.0	0.10	9	31	1.0	0.44
2000	15	100	1.0	0.00	16	25	2.5	0.00	10	50	1.0	0.00	10	25	1.0	0.00
2400	10	125	1.0	0.00	14	17	3.5	0.04	7	17	3.5	0.04	16	13	1.0	0.16
3600	14	17	3.5	0.04	15	37	1.0	0.10	9	31	1.0	0.44	9	1	15.5	0.44
4800	10	25	2.5	0.00	7	17	3.5	0.04	16	13	1.0	0.16	16	1	6.5	0.16
7200	7	17	3.5	0.04	9	31	1.0	0.44	9	1	15.5	0.44	10	7	1.0	0.79
9600	16	13	1.5	0.16	16	13	1.0	0.16	16	1	6.5	0.16	8	1	6.5	0.16
14400	13	16	1.0	0.16	9	1	15.5	0.44	10	7	1.0	0.79	10	1	3.5	0.79
19200	8	13	1.5	0.16	16	1	6.5	0.16	8	1	6.5	0.16	13	2	1.0	0.16
38400	13	6	1.0	0.16	8	1	6.5	0.16	13	2	1.0	0.16	13	1	1.0	0.16
56000	9	6	1.0	0.79	9	4	1.0	0.79	9	2	1.0	0.79				
115200	13	2	1.0	0.16	7	1	2.5	0.79								
128000	16	1	1.5	2.34	8	2	1.0	2.34								
230400	13	1	1.0	0.16												

20.0 Microwire/SPI Interface

Microwire/Plus is a synchronous serial communications protocol, originally implemented in National Semiconductor's COP8® and HPC families of microcontrollers to minimize the number of connections, and therefore the cost, of communicating with peripherals.

The CP3BT13 has an enhanced Microwire/SPI interface module (MWSPI) that can communicate with all peripherals that conform to Microwire or Serial Peripheral Interface (SPI) specifications. This enhanced Microwire interface is capable of operating as either a master or slave and in 8- or 16-bit mode. Figure 74 shows a typical enhanced Microwire interface application.

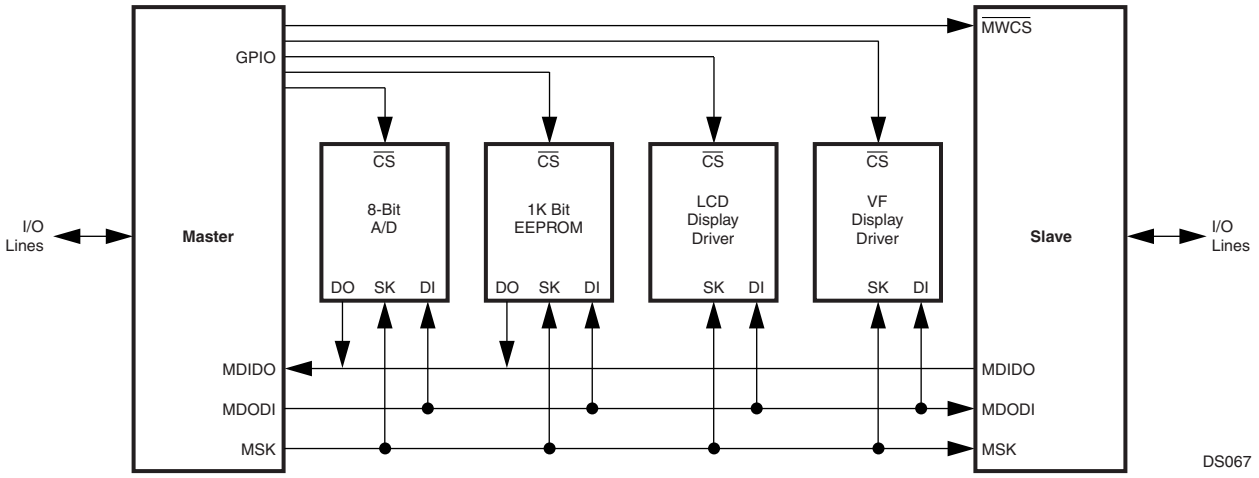

Figure 74. Microwire Interface

The enhanced Microwire interface module includes the following features:

- Programmable operation as a Master or Slave
- Programmable shift-clock frequency (master only)
- Programmable 8- or 16-bit mode of operation
- 8- or 16-bit serial I/O data shift register
- Two modes of clocking data
- Serial clock can be low or high when idle
- 16-bit read buffer
- Busy bit, Read Buffer Full bit, and Overrun bit for polling and as interrupt sources
- Supports multiple masters
- Maximum bit rate of 10M bits/second (master mode) 5M bits/second (slave mode) at 20 MHz System Clock
- Supports very low-end slaves with the Slave Ready output
- Echo back enable/disable (Slave only)

20.1 MICROWIRE OPERATION

The Microwire interface allows several devices to be connected on one three-wire system. At any given time, one of these devices operates as the master while all other devices operate as slaves. The Microwire interface allows the device to operate either as a master or slave transferring 8- or 16-bits of data.

The master device supplies the synchronous clock (MSK) for the serial interface and initiates the data transfer. The slave devices respond by sending (or receiving) the requested data. Each slave device uses the master's clock for serially shifting data out (or in), while the master shifts the data in (or out).

The three-wire system includes: the serial data in signal (MDIDO for master mode, MDODI for slave mode), the serial data out signal (MDODI for master mode, MDIDO for slave mode), and the serial clock (MSK).

In slave mode, an optional fourth signal ($\overline{\text{MWCS}}$) may be used to enable the slave transmit. At any given time, only one slave can respond to the master. Each slave device has its own chip select signal ($\overline{\text{MWCS}}$) for this purpose.

Figure 75 shows a block diagram of the enhanced Microwire serial interface in the device.

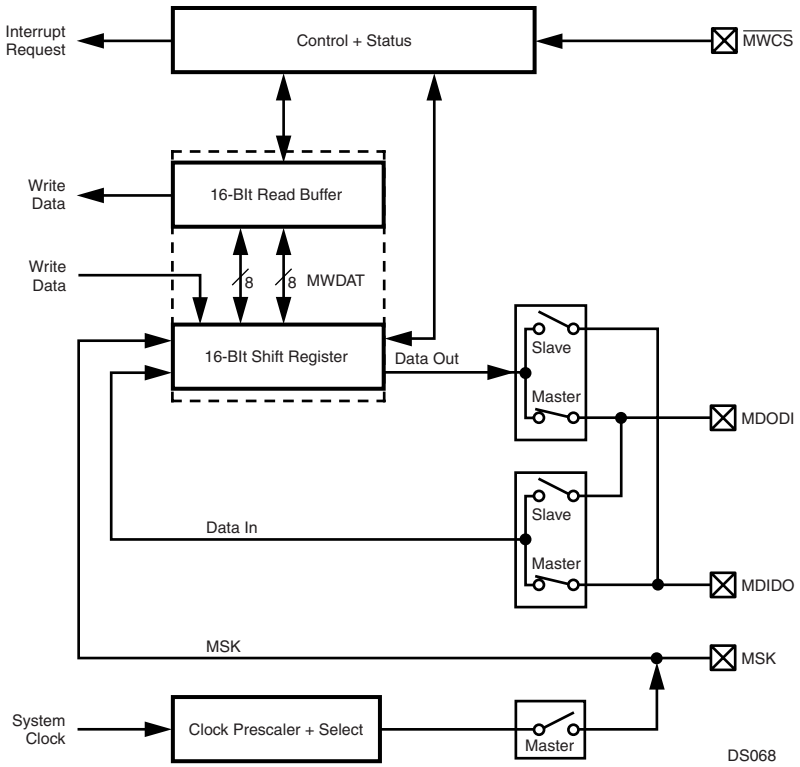

Figure 75. Microwire Block Diagram

20.1.1 Shifting

The Microwire interface is a full duplex transmitter/receiver. A 16-bit shifter, which can be split into a low and high byte, is used for both transmitting and receiving. In 8-bit mode, only the lower 8-bits are used to transfer data. The transmitted data is shifted out through MDODI pin (master mode) or MDIDO pin (slave mode), starting with the most significant bit. At the same time, the received data is shifted in through MDIDO pin (master mode) or MDODI pin (slave mode), also starting with the most significant bit first.

The shift in and shift out are controlled by the MSK clock. In each clock cycle of MSK, one bit of data is transmitted/received. The 16-bit shifter is accessible as the MWDAT register. Reading the MWDAT register returns the value in the read buffer. Writing to the MWDAT register updates the 16-bit shifter.

20.1.2 Reading

The enhanced Microwire interface implements a double buffer on read. As illustrated in Figure 75, the double read buffer consists of the 16-bit shifter and a buffer, called the read buffer.

The 16-bit shifter loads the read buffer with new data when the data transfer sequence is completed and previous data in the read buffer has been read. In master mode, an Overrun error occurs when the read buffer is full, the 16-bit shifter is full and a new data transfer sequence starts.

When 8-bit mode is selected, the lower byte of the shift register is loaded into the lower byte of the read buffer and the read buffer's higher byte remains unchanged.

The "Receive Buffer Full" (RBF) bit indicates if the MWDAT register holds valid data. The OVR bit indicates that an overrun condition has occurred.

20.1.3 Writing

The "Microwire Busy" (BSY) bit indicates whether the MWDAT register can be written. All write operations to the MWDAT register update the shifter while the data contained in the read buffer is not affected. Undefined results will occur if the MWDAT register is written to while the BSY bit is set.

20.1.4 Clocking Modes

Two clocking modes are supported: the normal mode and the alternate mode.

In the normal mode, the output data, which is transmitted on the MDODI pin (master mode) or the MDIDO pin (slave mode), is clocked out on the falling edge of the shift clock MSK. The input data, which is received via the MDIDO pin (master mode) or the MDODI pin (slave mode), is sampled on the rising edge of MSK.

In the alternate mode, the output data is shifted out on the rising edge of MSK on the MDODI pin (master mode) or MDIDO pin (slave mode). The input data, which is received via MDIDO pin (master mode) or MDODI pin (slave mode), is sampled on the falling edge of MSK.

The clocking modes are selected with the MSKM bit. The SCIDL bit allows selection of the value of MSK when it is idle (when there is no data being transferred). Various MSK clock frequencies can be programmed via the MCDV bits. Figures 27, 28, 29, and 30 show the data transfer timing for

the normal and the alternate modes with the SCIDL bit equal to 0 and equal to 1.

Note that when data is shifted out on MDODI (master mode) or MDIDO (slave mode) on the leading edge of the MSK clock, bit 14 (16-bit mode) is shifted out on the second leading edge of the MSK clock. When data are shifted out on MDODI (master mode) or MDIDO (slave mode) on the trailing edge of MSK, bit 14 (16-bit mode) is shifted out on the first trailing edge of MSK.

20.2 MASTER MODE

In Master mode, the MSK pin is an output for the shift clock, MSK. When data is written to the (MWDAT register), eight or sixteen MSK clocks, depending on the mode selected, are generated to shift the 8 or 16 bits of data and then MSK goes idle again. The MSK idle state can be either high or low, depending on the SCIDL bit.

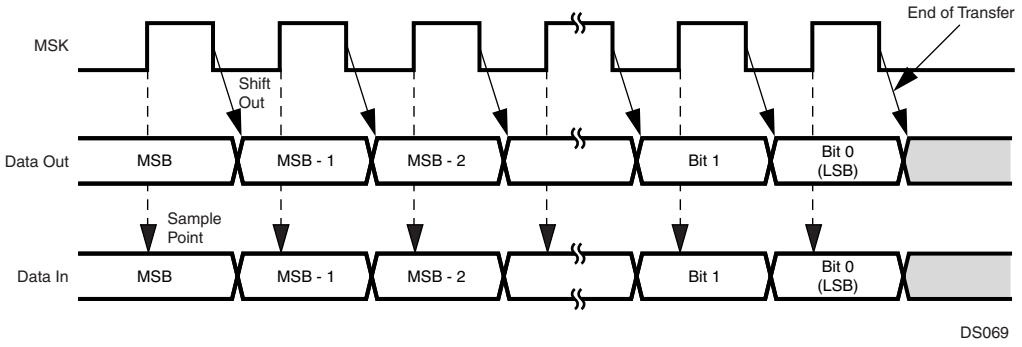

Figure 76. Normal Mode (SCIDL = 0)

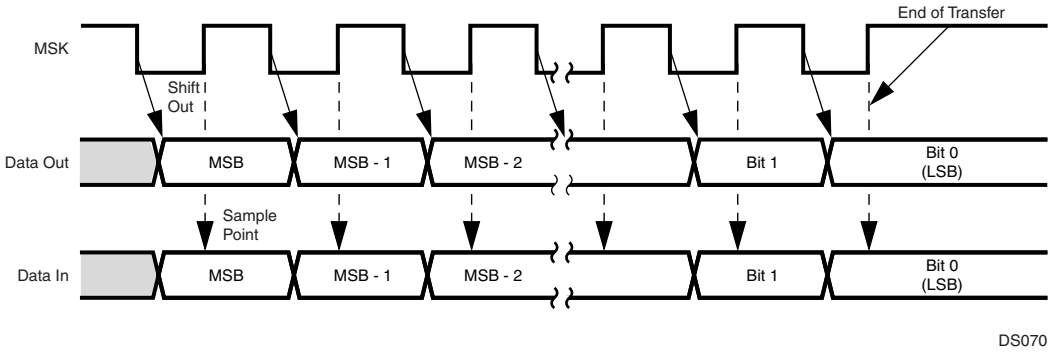

Figure 77. Normal Mode (SCIDL = 1)

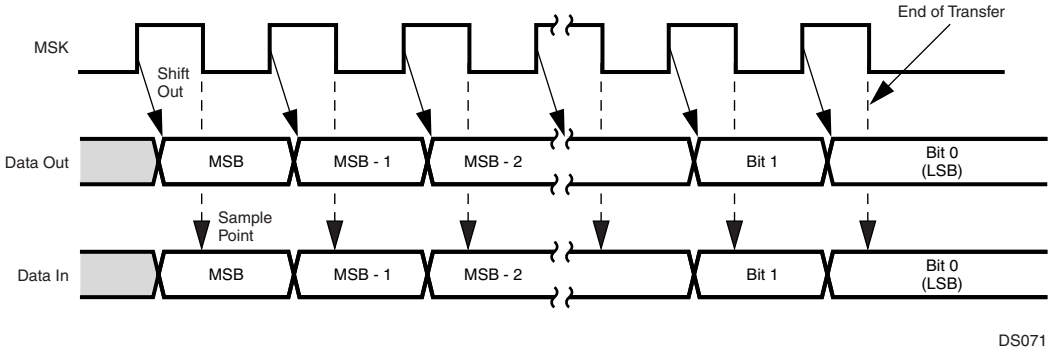

Figure 78. Alternate Mode (SCIDL = 0)

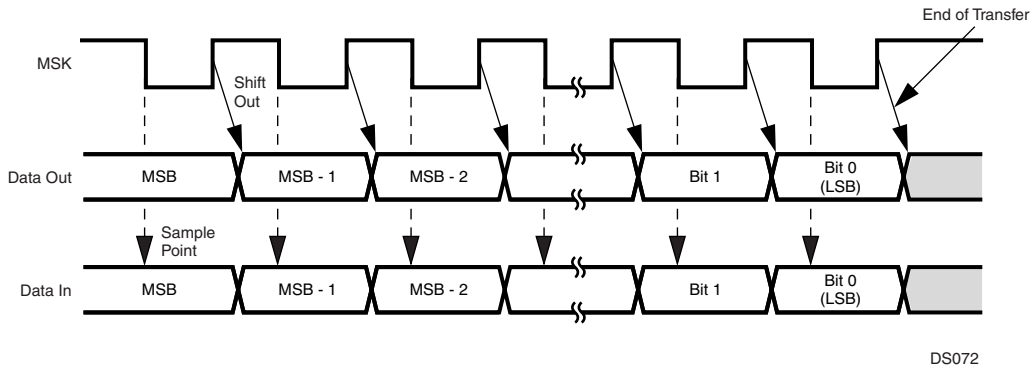

Figure 79. Alternate Mode (SCIDL = 1)

20.3 SLAVE MODE

In Slave mode, the MSK pin is an input for the shift clock MSK. MDIDO is placed in TRI-STATE mode when $\overline{\text{MWCS}}$ is inactive. Data transfer is enabled when $\overline{\text{MWCS}}$ is active.

The slave starts driving MDIDO when $\overline{\text{MWCS}}$ is activated. The most significant bit (lower byte in 8-bit mode or upper byte in 16-bit mode) is output onto the MDIDO pin first. After eight or sixteen clocks (depending on the selected mode), the data transfer is completed.

If a new shift process starts before MWDAT was written, i.e., while MWDAT does not contain any valid data, and the "Echo Enable" (ECHO) bit is set, the data received from MDODI is transmitted on MDIDO in addition to being shifted to MWDAT. If the ECHO bit is clear, the data transmitted on MDIDO is the data held in the MWDAT register, regardless of its validity. The master may negate the $\overline{\text{MWCS}}$ signal to synchronize the bit count between the master and the slave. In the case that the slave is the only slave in the system, $\overline{\text{MWCS}}$ can be tied to VSS.

20.4 INTERRUPT GENERATION

An interrupt is generated in any of the following cases:

- When the read buffer is full (RBF = 1) and the "Enable Interrupt for Read" bit is set (EIR = 1).
- Whenever the shifter is not busy, i.e. the BSY bit is clear (BSY = 0) and the "Enable Interrupt for Write" bit is set (EIW = 1).
- When an overrun condition occurs (OVR is set) and the "Enable Interrupt on Overrun" bit is set (MEIO = 1). This usage is restricted to master mode.

In addition, $\overline{\text{MWCS}}$ is an input to the MIWU (see Section 13.0), which can be programmed to generate an edge-triggered interrupt.

Figure 80 illustrates the various interrupt capabilities of this module.

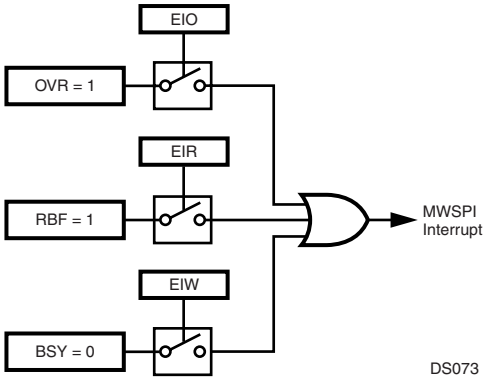

Figure 80. MWSPI Interrupts

20.5 MICROWIRE INTERFACE REGISTERS

Software interacts with the Microwire interface by accessing the Microwire registers. There are three such registers:

Table 63 Microwire Interface Registers

Name	Address	Description
MWDAT	FF FE60h	Microwire Data Register
MWCTL1	FF FE62h	Microwire Control Register
MWSTAT	FF FE64h	Microwire Status Register

20.5.1 Microwire Data Register (MWDAT)

The MWDAT register is a word-wide, read/write register used to transmit and receive data through the MDODI and MDIDO pins. Figure 81 shows the hardware structure of the register.

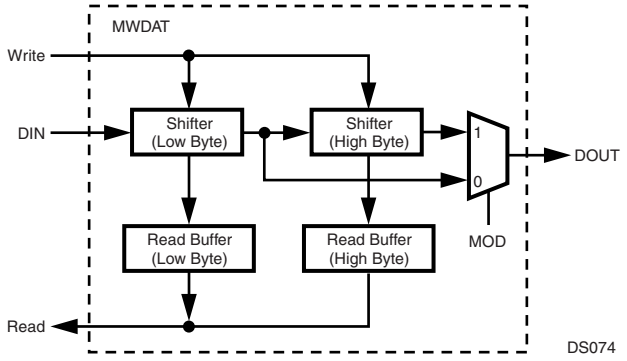

Figure 81. MWDAT Register

20.5.2 Microwire Control Register (MWCTL1)

The MWCTL1 register is a word-wide, read/write register used to control the Microwire module. To avoid clock glitches, the MWEN bit must be clear while changing the states of any other bits in the register. At reset, all non-reserved bits are cleared. The register format is shown below.

7	6	5	4	3	2	1	0
SCM	EIW	EIR	EIO	ECHO	MOD	MNS	MWEN

15 … 9	8
SCDV	SCIDL

MWEN The Microwire Enable bit controls whether the Microwire interface module is enabled.
0 – Microwire module disabled.
1 – Microwire module enabled.
Clearing this bit disables the module, clears the status bits in the Microwire status register (the BSY, RBF, and OVR bits in MWSTAT), and places the Microwire interface pins in the states described below.

Pin	State When Disabled
MSK	Master – SCIDL Bit Slave – Input
$\overline{\text{MWCS}}$	Input
MDIDO	Master – Input Slave – TRI-STATE
MDODI	Master – Known value Slave – Input

MNS The Master/Slave Select bit controls whether the CP3BT13 is a master or slave. When clear, the device operates as a slave. When set, the device operates as the master.
0 – CP3BT13 is slave.
1 – CP3BT13 is master.

MOD The Mode Select bit controls whether 8- or 16-bit mode is used. When clear, the device operates in 8-bit mode. When set, the device operates in 16-bit mode. This bit must only be changed when the module is disabled or idle (MWSTAT.BSY = 0).
0 – 8-bit mode.
1 – 16-bit mode.

ECHO The Echo Back bit controls whether the echo back function is enabled in slave mode. This bit must be written only when the Microwire interface is idle (MWSTAT.BSY=0). The ECHO bit is ignored in master mode. The MWDAT register is valid from the time the register has been written until the end of the transfer. In the echo back mode, MDODI is transmitted (echoed back) on MDIDO if the MWDAT register does not contain any valid data. With the echo back function disabled, the data held in the MWDAT register is transmitted on MDIDO, whether or not the data is valid.
0 – Echo back disabled.
1 – Echo back enabled.

EIO The Enable Interrupt on Overrun bit enables or disables the overrun error interrupt. When set, an interrupt is generated when the Receive Overrun Error bit (MWSTAT.OVR) is set. Otherwise, no interrupt is generated when an overrun error occurs. This bit must only be enabled in master mode.
0 – Disable overrun error interrupts.
1 – Enable overrun error interrupts.

EIR — The Enable Interrupt for Read bit controls whether an interrupt is generated when the read buffer becomes full. When set, an interrupt is generated when the Read Buffer Full bit (MWSTAT.RBF) is set. Otherwise, no interrupt is generated when the read buffer is full.
0 – No read buffer full interrupt.
1 – Interrupt when read buffer becomes full.

EIW — The Enable Interrupt for Write bit controls whether an interrupt is generated when the Busy bit (MWSTAT.BSY) is cleared, which indicates that a data transfer sequence has been completed and the read buffer is ready to receive the new data. Otherwise, no interrupt is generated when the Busy bit is cleared.
0 – No interrupt on data transfer complete.
1 – Interrupt on data transfer complete.

SCM — The Shift Clock Mode bit selects between the normal clocking mode and the alternate clocking mode. In the normal mode, the output data is clocked out on the falling edge of MSK and the input data is sampled on the rising edge of MSK. In the alternate mode, the output data is clocked out on the rising edge of MSK and the input data is sampled on the falling edge of MSK.
0 – Normal clocking mode.
1 – Alternate clocking mode.

SCIDL — The Shift Clock Idle bit controls the value of the MSK output when the Microwire module is idle. This bit must be changed only when the Microwire module is disabled (MWEN = 0) or when no bus transaction is in progress (MWSTAT.BSY = 0).
0 – MSK is low when idle.
1 – MSK is high when idle

SCDV — The Shift Clock Divider Value field specifies the divisor used for generating the MSK shift clock from the System Clock. The divisor is 2 × (MCDV[6:0] + 1). Valid values are 0000001b to 1111111b, so the division ratio may range from 3 to 256. This field is ignored in slave mode (MWCTL1.MMNS=0).

20.5.3 Microwire Status Register (MWSTAT)

The MWSTAT register is a word-wide, read-only register that shows the current status of the Microwire interface module. At reset, all non-reserved bits are clear. The register format is shown below.

15 … 3	2	1	0
Reserved	OVR	RBF	BSY

BSY — The Busy bit, when set, indicates that the Microwire shifter is busy. In master mode, the BSY bit is set when the MWDAT register is written. In slave mode, the bit is set on the first leading edge of MSK when $\overline{\text{MWCS}}$ is asserted or when the MWDAT register is written, whichever occurs first. In both master and slave modes, this bit is cleared when the Microwire data transfer sequence is completed and the read buffer is ready to receive the new data; in other words, when the previous data held in the read buffer has already been read. If the previous data in the read buffer has not been read and new data has been received into the shift register, the BSY bit will not be cleared, as the transfer could not be completed because the contents of the shift register could not be transferred into the read buffer.
0 – Microwire shifter is not busy.
1 – Microwire shifter is busy.

RBF — The Read Buffer Full bit, when set, indicates that the Microwire read buffer is full and ready to be read by software. It is set when the shifter loads the read buffer, which occurs upon completion of a transfer sequence if the read buffer is empty. The RBF bit is updated when the MWDAT register is read. At that time, the RBF bit is cleared if the shifter does not contain any new data (in other words, the shifter is not receiving data or has not yet received a full byte of data). The RBF bit remains set if the shifter already holds new data at the time that MWDAT is read. In that case, MWDAT is immediately reloaded with the new data and is ready to be read by software.
0 – Microwire read buffer is not full.
1 – Microwire read buffer is full.

OVR — The Receive Overrun Error bit, when set in master mode, indicates that a receive overrun error has occurred. This error occurs when the read buffer is full, the 8-bit shifter is full, and a new data transfer sequence starts. This bit is undefined in slave mode. The OVR bit, once set, remains set until cleared by software. Software clears this bit by writing a 1 to its bit position. Writing a 0 to this bit position has no effect. No other bits in the MWSTAT register are affected by a write operation to the register.
0 – No receive overrun error has occurred.
1 – Receive overrun error has occurred.

21.0 ACCESS.bus Interface

The ACCESS.bus interface module (ACB) is a two-wire serial interface compatible with the ACCESS.bus physical layer. It permits easy interfacing to a wide range of low-cost memories and I/O devices, including: EEPROMs, SRAMs, timers, A/D converters, D/A converters, clock chips, and peripheral drivers. It is compatible with Intel's SMBus and Philips' I^2C bus. The module can be configured as a bus master or slave, and can maintain bidirectional communications with both multiple master and slave devices.

This section presents an overview of the bus protocol, and its implementation by the module.

- ACCESS.bus master and slave
- Supports polling and interrupt-controlled operation
- Generate a wake-up signal on detection of a Start Condition, while in power-down mode
- Optional internal pull-up on SDA and SCL pins

21.1 ACB PROTOCOL OVERVIEW

The ACCESS.bus protocol uses a two-wire interface for bidirectional communication between the devices connected to the bus. The two interface signals are the Serial Data Line (SDA) and the Serial Clock Line (SCL). These signals should be connected to the positive supply, through pull-up resistors, to keep the signals high when the bus is idle.

The ACCESS.bus protocol supports multiple master and slave transmitters and receivers. Each bus device has a unique address and can operate as a transmitter or a receiver (though some peripherals are only receivers).

During data transactions, the master device initiates the transaction, generates the clock signal, and terminates the transaction. For example, when the ACB initiates a data transaction with an ACCESS.bus peripheral, the ACB becomes the master. When the peripheral responds and transmits data to the ACB, their master/slave (data transaction initiator and clock generator) relationship is unchanged, even though their transmitter/receiver functions are reversed.

21.1.1 Data Transactions

One data bit is transferred during each clock period. Data is sampled during the high phase of the serial clock (SCL). Consequently, throughout the clock high phase, the data must remain stable (see Figure 82). Any change on the SDA signal during the high phase of the SCL clock and in the middle of a transaction aborts the current transaction. New data must be driven during the low phase of the SCL clock. This protocol permits a single data line to transfer both command/control information and data using the synchronous serial clock.

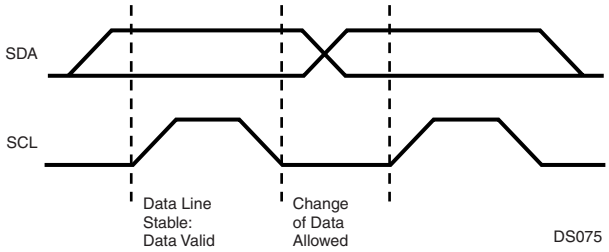

Figure 82. Bit Transfer

Each data transaction is composed of a Start Condition, a number of byte transfers (programmed by software), and a Stop Condition to terminate the transaction. Each byte is transferred with the most significant bit first, and after each byte, an Acknowledge signal must follow.

At each clock cycle, the slave can stall the master while it handles the previous data, or prepares new data. This can be performed for each bit transferred or on a byte boundary by the slave holding SCL low to extend the clock-low period. Typically, slaves extend the first clock cycle of a transfer if a byte read has not yet been stored, or if the next byte to be transmitted is not yet ready. Some microcontrollers with limited hardware support for ACCESS.bus extend the access after each bit, to allow software time to handle this bit.

Start and Stop

The ACCESS.bus master generates Start and Stop Conditions (control codes). After a Start Condition is generated, the bus is considered busy and it retains this status until a certain time after a Stop Condition is generated. A high-to-low transition of the data line (SDA) while the clock (SCL) is high indicates a Start Condition. A low-to-high transition of the SDA line while the SCL is high indicates a Stop Condition (Figure 83).

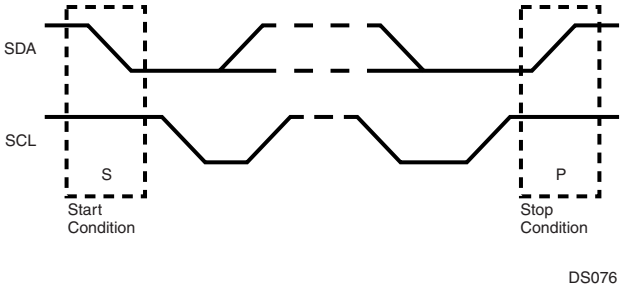

Figure 83. Start and Stop Conditions

In addition to the first Start Condition, a repeated Start Condition can be generated in the middle of a transaction. This allows another device to be accessed, or a change in the direction of the data transfer.

Acknowledge Cycle

The Acknowledge Cycle consists of two signals: the acknowledge clock pulse the master sends with each byte transferred, and the acknowledge signal sent by the receiving device (Figure 84).

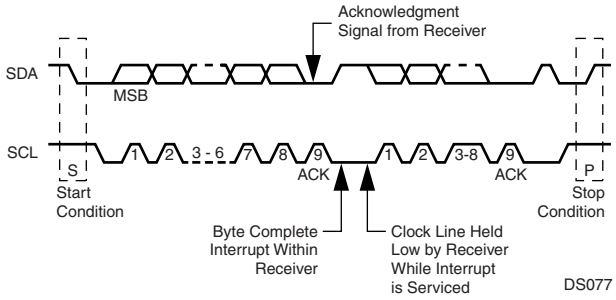

Figure 84. ACCESS.bus Data Transaction

The master generates the acknowledge clock pulse on the ninth clock pulse of the byte transfer. The transmitter releases the SDA line (permits it to go high) to allow the receiver to send the acknowledge signal. The receiver must pull down the SDA line during the acknowledge clock pulse, which signals the correct reception of the last data byte, and its readiness to receive the next byte. Figure 85 illustrates the acknowledge cycle.

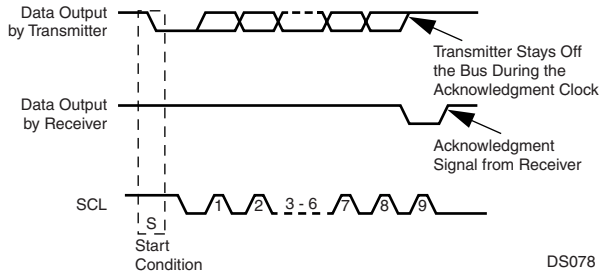

Figure 85. ACCESS.bus Acknowledge Cycle

The master generates an acknowledge clock pulse after each byte transfer. The receiver sends an acknowledge signal after every byte received. There are two exceptions to the "acknowledge after every byte" rule.

- When the master is the receiver, it must indicate to the transmitter an end-of-data condition by not-acknowledging ("negative acknowledge") the last byte clocked out of the slave. This "negative acknowledge" still includes the acknowledge clock pulse (generated by the master), but the SDA line is not pulled down.
- When the receiver is full, otherwise occupied, or a problem has occurred, it sends a negative acknowledge to indicate that it cannot accept additional data bytes.

Addressing Transfer Formats

Each device on the bus has a unique address. Before any data is transmitted, the master transmits the address of the slave being addressed. The slave device should send an acknowledge signal on the SDA signal, once it recognizes its address.

The address is the first seven bits after a Start Condition. The direction of the data transfer (R/$\overline{W}$) depends on the bit sent after the address (the eighth bit). A low-to-high transition during a SCL high period indicates the Stop Condition, and ends the transaction (Figure 86).

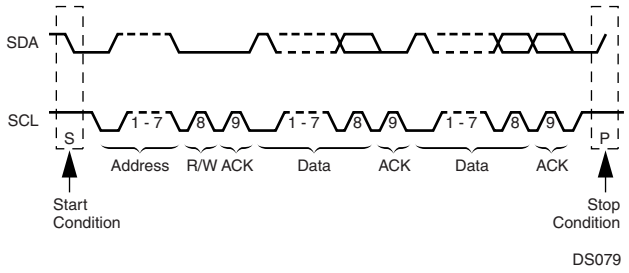

Figure 86. A Complete ACCESS.bus Data Transaction

When the address is sent, each device in the system compares this address with its own. If there is a match, the device considers itself addressed and sends an acknowledge signal. Depending upon the state of the R/$\overline{W}$ bit (1 = read, 0 = write), the device acts as a transmitter or a receiver.

The ACCESS.bus protocol allows sending a general call address to all slaves connected to the bus. The first byte sent specifies the general call address (00h) and the second byte specifies the meaning of the general call (for example, "Write slave address by software only"). Those slaves that require the data acknowledge the call and become slave receivers; the other slaves ignore the call.

Arbitration on the Bus

Arbitration is required when multiple master devices attempt to gain control of the bus simultaneously. Control of the bus is initially determined according to address bits and clock cycle. If the masters are trying to address the same bus device, data comparisons determine the outcome of this arbitration. In master mode, the device immediately aborts a transaction if the value sampled on the SDA lines differs from the value driven by the device. (Exceptions to this rule are SDA while receiving data; in these cases the lines may be driven low by the slave without causing an abort.)

The SCL signal is monitored for clock synchronization and allows the slave to stall the bus. The actual clock period will be the one set by the master with the longest clock period or by the slave stall period. The clock high period is determined by the master with the shortest clock high period.

When an abort occurs during the address transmission, the master that identifies the conflict should give up the bus, switch to slave mode, and continue to sample SDA to see if it is being addressed by the winning master on the ACCESS.bus.

21.2 ACB FUNCTIONAL DESCRIPTION

The ACB module provides the physical layer for an ACCESS.bus compliant serial interface. The module is configurable as either a master or slave device. As a slave, the ACB module may issue a request to become the bus master.

21.2.1 Master Mode

An ACCESS.bus transaction starts with a master device requesting bus mastership. It sends a Start Condition, followed by the address of the device it wants to access. If this transaction is successfully completed, software can assume that the device has become the bus master.

For a device to become the bus master, software should perform the following steps:

1. Set the ACBCTL1.START bit, and configure the ACBCTL1.INTEN bit to the desired operation mode (Polling or Interrupt). This causes the ACB to issue a Start Condition on the ACCESS.bus, as soon as the ACCESS.bus is free (ACBCST.BB=0). It then stalls the bus by holding SCL low.
2. If a bus conflict is detected, (i.e., some other device pulls down the SCL signal before this device does), the ACBST.BER bit is set.
3. If there is no bus conflict, the ACBST.MASTER and ACBST.SDAST bits are set.
4. If the ACBCTL1.INTEN bit is set, and either the ACBST.BER bit or the ACBST.SDAST bit is set, an interrupt is sent to the ICU.

Sending the Address Byte

Once this device is the active master of the ACCESS.bus (ACBST.MASTER = 1), it can send the address on the bus. The address should not be this device's own address as specified in the ACBADDR.ADDR field if the ACBADDR.SAEN bit is set or the ACBADDR2.ADDR field if the ACBADDR2.SAEN bit is set, nor should it be the global call address if the ACBST.GCMTCH bit is set.

To send the address byte use the following sequence:

1. Configure the ACBCTL1.INTEN bit according to the desired operation mode. For a receive transaction where software wants only one byte of data, it should set the ACBCTL1.ACK bit. If only an address needs to be sent, set the ACBCTL1.STASTRE bit.
2. Write the address byte (7-bit target device address), and the direction bit, to the ACBSDA register. This causes the module to generate a transaction. At the end of this transaction, the acknowledge bit received is copied to the ACBST.NEGACK bit. During the transaction, the SDA and SCL signals are continuously checked for conflict with other devices. If a conflict is detected, the transaction is aborted, the ACBST.BER bit is set, and the ACBST.MASTER bit is cleared.
3. If the ACBCTL1.STASTRE bit is set, and the transaction was successfully completed (i.e., both the ACBST.BER and ACBST.NEGACK bits are cleared), the ACBST.STASTR bit is set. In this case, the ACB stalls any further ACCESS.bus operations (i.e., holds SCL low). If the ACBCTL1.INTE bit is set, it also sends an interrupt to the ICU.
4. If the requested direction is transmit, and the start transaction was completed successfully (i.e., neither the ACBST.NEGACK nor ACBST.BER bit is set, and no other master has accessed the device), the ACBST.SDAST bit is set to indicate that the module is waiting for service.
5. If the requested direction is receive, the start transaction was completed successfully, and the ACBCTL1.STASTRE bit is clear, the module starts receiving the first byte automatically.
6. Check that both the ACBST.BER and ACBST.NEGACK bits are clear. If the ACBCTL1.INTEN bit is set, an interrupt is generated when either the ACBST.BER or ACBST.NEGACK bit is set.

Master Transmit

After becoming the bus master, the device can start transmitting data on the ACCESS.bus. To transmit a byte, software must:

1. Check that the BER and NEGACK bits in the ACBST register are clear and the ACBST.SDAST bit is set. Also, if the ACBCTL1.STASTRE bit is set, check that the ACBST.STASTR bit is clear.
2. Write the data byte to be transmitted to the ACBSDA register.

When the slave responds with a negative acknowledge, the ACBST.NEGACK bit is set and the ACBST.SDAST bit remains cleared. In this case, if the ACBCTL1.INTEN bit is set, an interrupt is sent to the core.

Master Receive

After becoming the bus master, the device can start receiving data on the ACCESS.bus. To receive a byte, software must:

1. Check that the ACBST.SDAST bit is set and the ACBST.BER bit is clear. Also, if the ACBCTL1.STASTRE bit is set, check that the ACBST.STASTR bit is clear.
2. Set the ACBCTL1.ACK bit, if the next byte is the last byte that should be read. This causes a negative acknowledge to be sent.
3. Read the data byte from the ACBSDA register.

Master Stop

A Stop Condition may be issued only when this device is the active bus master (ACBST.MASTRER = 1). To end a transaction, set the ACBCTL1.STOP bit before clearing the current stall bit (i.e., the ACBST.SDAST, ACBST.NEGACK, or ACBST.STASTR bit). This causes the module to send a Stop Condition immediately, and clear the ACBCTL1.STOP bit.

Master Bus Stall

The ACB module can stall the ACCESS.bus between transfers while waiting for the core's response. The ACCESS.bus is stalled by holding the SCL signal low after the acknowledge cycle. Note that this is interpreted as the beginning of the following bus operation. Software must make sure that the next operation is prepared before the bit that causes the bus stall is cleared.

The bits that can cause a stall in master mode are:

- Negative acknowledge after sending a byte (ACBSTNEGACK = 1).
- ACBST.SDAST bit is set.
- If the ACBCTL1.STASTRE bit is set, after a successful start (ACBST.STASTR = 1).

Repeated Start

A repeated start is performed when this device is already the bus master (ACBST.MASTER = 1). In this case, the ACCESS.bus is stalled and the ACB waits for the core handling due to: negative acknowledge (ACBST.NEGACK = 1), empty buffer (ACBST.SDAST = 1), or a stop-after-start (ACBST.STASTR = 1).

For a repeated start:

1. Set the ACBCTL1.START bit.
2. In master receive mode, read the last data item from the ACBSDA register.
3. Follow the address send sequence, as described in "Sending the Address Byte" on page 150.
4. If the ACB was waiting for handling due to ACBST.STASTR = 1, clear it only after writing the requested address and direction to the ACBSDA register.

Master Error Detections

The ACB detects illegal Start or Stop Conditions (i.e., a Start or Stop Condition within the data transfer, or the acknowledge cycle) and a conflict on the data lines of the ACCESS.bus. If an illegal action is detected, the BER bit is set, and the MASTER mode is exited (the MASTER bit is cleared).

Bus Idle Error Recovery

When a request to become the active bus master or a restart operation fails, the ACBST.BER bit is set to indicate the error. In some cases, both this device and the other device may identify the failure and leave the bus idle. In this case, the start sequence may not be completed and the ACCESS.bus may remain deadlocked.

To recover from deadlock, use the following sequence:

1. Clear the ACBST.BER and ACBCST.BB bits.
2. Wait for a time-out period to check that there is no other active master on the bus (i.e., the ACBCST.BB bit remains clear).
3. Disable, and re-enable the ACB to put it in the non-addressed slave mode.
4. At this point, some of the slaves may not identify the bus error. To recover, the ACB becomes the bus master by issuing a Start Condition and sends an address field; then issue a Stop Condition to synchronize all the slaves.

21.2.2 Slave Mode

A slave device waits in Idle mode for a master to initiate a bus transaction. Whenever the ACB is enabled, and it is not acting as a master (i.e., ACBST.MASTER = 0), it acts as a slave device.

Once a Start Condition on the bus is detected, this device checks whether the address sent by the current master matches either:

- The ACBADDR.ADDR value if the ACBADDR.SAEN bit is set.
- The ACBADDR2.ADDR value if the ACBADDR2.SAEN bit is set.
- The general call address if the ACBCTL1.GCM bit is set.

This match is checked even when the ACBST.MASTER bit is set. If a bus conflict (on SDA or SCL) is detected, the ACBST.BER bit is set, the ACBST.MASTER bit is cleared, and this device continues to search the received message for a match. If an address match, or a global match, is detected:

1. This device asserts its data pin during the acknowledge cycle.
2. The ACBCST.MATCH, ACBCST.MATCHAF (or ACBCST.GCMTCH if it is a global call address match, or ACBCST.ARPMATCH if it is an ARP address), and ACBST.NMATCH in the ACBCST register are set. If the ACBST.XMIT bit is set (i.e., slave transmit mode), the ACBST.SDAST bit is set to indicate that the buffer is empty.
3. If the ACBCTL1.INTEN bit is set, an interrupt is generated if both the INTEN and NMINTE bits in the ACBCTL1 register are set.
4. Software then reads the ACBST.XMIT bit to identify the direction requested by the master device. It clears the ACBST.NMATCH bit so future byte transfers are identified as data bytes.

Slave Receive and Transmit

Slave Receive and Transmit are performed after a match is detected and the data transfer direction is identified. After a byte transfer, the ACB extends the acknowledge clock until software reads or writes the ACBSDA register. The receive and transmit sequence are identical to those used in the master routine.

Slave Bus Stall

When operating as a slave, this device stalls the ACCESS.bus by extending the first clock cycle of a transaction in the following cases:

— The ACBST.SDAST bit is set.
— The ACBST.NMATCH, and ACBCTL1.NMINTE bits are set.

Slave Error Detections

The ACB detects illegal Start and Stop Conditions on the ACCESS.bus (i.e., a Start or Stop Condition within the data transfer or the acknowledge cycle). When an illegal Start or Stop Condition is detected, the BER bit is set and the MATCH and GMATCH bits are cleared, causing the module to be an unaddressed slave.

Power Down

When this device is in Power Save, Idle, or Halt mode, the ACB module is not active but retains its status. If the ACB is enabled (ACBCTL2.ENABLE = 1) on detection of a Start Condition, a wake-up signal is issued to the MIWU module (see Section 13.0). Use this signal to switch this device to Active mode.

The ACB module cannot check the address byte for a match following the start condition that caused the wake-up event for this device. The ACB responds with a negative acknowledge, and the device should resend both the Start Condition and the address after this device has had time to wake up.

Check that the ACBCST.BUSY bit is inactive before entering Power Save, Idle, or Halt mode. This guarantees that the device does not acknowledge an address sent and stop responding later.

21.2.3 SDA and SCL Pins Configuration

The SDA and SCL pins are driven as open-drain signals. For more information, see the I/O configuration section.

21.2.4 ACB Clock Frequency Configuration

The ACB module permits software to set the clock frequency used for the ACCESS.bus clock. The clock is set by the ACBCTL2.SCLFRQ field. This field determines the SCL clock period used by this device. This clock low period may be extended by stall periods initiated by the ACB module or by another ACCESS.bus device. In case of a conflict with another bus master, a shorter clock high period may be forced by the other bus master until the conflict is resolved.

21.3 ACCESS.BUS INTERFACE REGISTERS

The ACCESS.bus interface uses the registers listed in Table 64.

Table 64 ACCESS.bus Interface Registers

Name	Address	Description
ACBSDA	FF FEC0h	ACB Serial Data Register
ACBST	FF FEC2h	ACB Status Register
ACBCST	FF FEC4h	ACB Control Status Register
ACBCTL1	FF FEC6h	ACB Control Register 1
ACBCTL2	FF FECAh	ACB Control Register 2
ACBCTL3	FF FECEh	ACB Control Register 3
ACBADDR1	FF FEC8h	ACB Own Address Register 1
ACBADDR2	FF FECCh	ACB Own Address Register 2

21.3.1 ACB Serial Data Register (ACBSDA)

The ACBSDA register is a byte-wide, read/write shift register used to transmit and receive data. The most significant bit is transmitted (received) first and the least significant bit is transmitted (received) last. Reading or writing to the ACBSDA register is allowed when ACBST.SDAST is set; or for repeated starts after setting the START bit. An attempt to access the register in other cases produces unpredictable results.

7							0
DATA							

21.3.2 ACB Status Register (ACBST)

The ACBST register is a byte-wide, read-only register that maintains current ACB status. At reset, and when the module is disabled, ACBST is cleared.

7	6	5	4	3	2	1	0
SLVSTP	SDAST	BER	NEGACK	STASTR	NMATCH	MASTER	XMIT

XMIT — The Direction Bit bit is set when the ACB module is currently in master/slave transmit mode. Otherwise it is cleared.
0 – Receive mode.
1 – Transmit mode.

MASTER — The Master bit indicates that the module is currently in master mode. It is set when a request for bus mastership succeeds. It is cleared upon arbitration loss (BER is set) or the recognition of a Stop Condition.
0 – Slave mode.
1 – Master mode.

NMATCH — The New match bit is set when the address byte following a Start Condition, or repeated starts, causes a match or a global-call match. The NMATCH bit is cleared when written with 1. Writing 0 to NMATCH is ignored. If the ACBCTL1.INTEN bit is set, an interrupt is sent when this bit is set.
0 – No match.
1 – Match or global-call match.

STASTR — The Stall After Start bit is set by the successful completion of an address sending (i.e., a Start Condition sent without a bus error, or negative acknowledge), if the ACBCTL1.STASTRE bit is set. This bit is ignored in slave mode. When the STASTR bit is set, it stalls the bus by pulling down the SCL line, and suspends any other action on the bus (e.g., receives first byte in master receive mode). In addition, if the ACBCTL1.INTEN bit is set, it also sends an interrupt to the ICU. Writing 1 to the STASTR bit clears it. It is also cleared when the module is disabled. Writing 0 to the STASTR bit has no effect.
0 – No stall after start condition.
1 – Stall after successful start.

NEGACK — The Negative Acknowledge bit is set by hardware when a transmission is not acknowledged on the ninth clock. (In this case, the SDAST bit is not set.) Writing 1 to NEGACK clears it. It is also cleared when the module is disabled. Writing 0 to the NEGACK bit is ignored.
0 – No transmission not acknowledged condition.
1 – Transmission not acknowledged.

BER — The Bus Error bit is set by the hardware when a Start or Stop Condition is detected during data transfer (i.e., Start or Stop Condition during the transfer of bits 2 through 8 and acknowledge cycle), or when an arbitration problem is detected. Writing 1 to the BER bit clears it. It is also cleared when the module is disabled. Writing 0 to the BER bit is ignored.
0 – No bus error occurred.
1 – Bus error occurred.

SDAST — The SDA Status bit indicates that the SDA data register is waiting for data (transmit, as master or slave) or holds data that should be read (receive, as master or slave). This bit is cleared when reading from the ACBSDA register during a receive, or when written to during a transmit. When the ACBCTL1.START bit is set, reading the ACBSDA register does not clear the SDAST bit. This enables the ACB to send a repeated start in master receive mode.
0 – ACB module is not waiting for data transfer.
1 – ACB module is waiting for data to be loaded or unloaded.

SLVSTP — The Slave Stop bit indicates that a Stop Condition was detected after a slave transfer (i.e., after a slave transfer in which MATCH or GCMATCH is set). Writing 1 to SLVSTP clears it. It is also cleared when the module is disabled. Writing 0 to SLVSTP is ignored.
0 – No stop condition after slave transfer occurred.
1 – Stop condition after slave transfer occurred.

21.3.3 ACB Control Status Register (ACBCST)

The ACBCST register is a byte-wide, read/write register that maintains current ACB status. At reset and when the module is disabled, the non-reserved bits of ACBCST are cleared.

7	6	5	4	3	2	1	0
Reserved		TGSCL	TSDA	GCMTCH	MATCH	BB	BUSY

BUSY — The BUSY bit indicates that the ACB module is:
- Generating a Start Condition
- In Master mode (ACBST.MASTER is set)
- In Slave mode (ACBCST.MATCH or ACBCST.GCMTCH is set)
- In the period between detecting a Start and completing the reception of the address byte. After this, the ACB either becomes not busy or enters slave mode.

The BUSY bit is cleared by the completion of any of the above states, and by disabling the module. BUSY is a read only bit. It must always be written with 0.
0 – ACB module is not busy.
1 – ACB module is busy.

BB — The Bus Busy bit indicates the bus is busy. It is set when the bus is active (i.e., a low level on either SDA or SCL) or by a Start Condition. It is cleared when the module is disabled, on detection of a Stop Condition, or when writing 1 to this bit. See "Usage Hints" on page 156 for a description of the use of this bit. This bit should be set when either the SDA or SCL signals are low. This is done by sampling the SDA and SCL signals continuously and setting the bit if one of them is low. The bit remains set until cleared by a STOP condition or written with 1.
0 – Bus is not busy.
1 – Bus is busy.

MATCH — The Address Match bit indicates in slave mode when ACBADDR.SAEN is set and the first seven bits of the address byte (the first byte transferred after a Start Condition) matches the 7-bit address in the ACBADDR register, or when ACBADDR2.SAEN is set and the first seven bits of the address byte matches the 7-bit address in the ACBADDR2 register. It is cleared by Start Condition or repeated Start and Stop Condition (including illegal Start or Stop Condition).
0 – No address match occurred.
1 – Address match occurred.

GCMTCH — The Global Call Match bit is set in slave mode when the ACBCTL1.GCMEN bit is set and the address byte (the first byte transferred after a Start Condition) is 00h. It is cleared by a Start Condition or repeated Start and Stop Condition (including illegal Start or Stop Condition).
0 – No global call match occurred.
1 – Global call match occurred.

TSDA — The Test SDA bit samples the state of the SDA signal. This bit can be used while recovering from an error condition in which the SDA signal is constantly pulled low by a slave that went out of sync. This bit is a read-only bit. Data written to it is ignored.

TGSCL — The Toggle SCL bit enables toggling the SCL signal during error recovery. When the SDA signal is low, writing 1 to this bit drives the SCL signal high for one cycle. Writing 1 to TGSCL when the SDA signal is high is ignored. The bit is cleared when the clock toggle is completed.
0 – Writing 0 has no effect.
1 – Writing 1 toggles the SDA signal high for one cycle.

21.3.4 ACB Control Register 1 (ACBCTL1)

The ACBCTL1 register is a byte-wide, read/write register that configures and controls the ACB module. At reset and while the module is disabled (ACBCTL2.ENABLE = 0), the ACBCTL1 register is cleared.

7	6	5	4	3	2	1	0
STASTRE	NMINTE	GCMEN	ACK	Res.	INTEN	STOP	START

START — The Start bit is set to generate a Start Condition on the ACCESS.bus. The START bit is cleared when the Start Condition is sent, or upon detection of a Bus Error (ACBST.BER = 1). This bit should be set only when in Master mode, or when requesting Master mode. If this device is not the active master of the bus (ACBST.MASTER = 0), setting the START bit generates a Start Condition as soon as the ACCESS.bus is free (ACBCST.BB = 0). An address send sequence should then be performed. If this device is the active master of the bus (ACBST.MASTER = 1), when the START bit is set, a write to the ACBSDA register generates a Start Condition, then the ACBSDA data is transmitted as the slave's address and the requested transfer direction. This case is a repeated Start Condition. It may be used to switch the direction of the data flow between the master and the slave, or to choose another slave device without using a Stop Condition in between.
0 – Writing 0 has no effect.
1 – Writing 1 generates a Start condition.

STOP — The Stop bit in master mode generates a Stop Condition that completes or aborts the current message transfer. This bit clears itself after the Stop condition is issued.
0 – Writing 0 has no effect.
1 – Writing 1 generates a Stop condition.

INTEN — The Interrupt Enable bit controls generating ACB interrupts. When the INTEN bit is cleared ACB interrupt is disabled. When the INTEN bit is set, interrupts are enabled.
0 – ACB interrupts disabled.
1 – ACB interrupts enabled.
An interrupt is generated (the interrupt signal to the ICU is high) on any of the following events:

- An address MATCH is detected (ACBST.NMATCH = 1) and the NMINTE bit is set.
- A Bus Error occurs (ACBST.BERR = 1).
- Negative acknowledge after sending a byte (ACBST.NEGACK = 1).
- An interrupt is generated on acknowledge of each transaction (same as hardware setting the ACBST.SDAST bit).
- If ACBCTL1.STASTRE = 1, in master mode after a successful start (ACBST.STASTR = 1).
- Detection of a Stop Condition while in slave receive mode (ACBST.SLVSTP = 1).

ACK — The Acknowledge bit holds the value this device sends in master or slave mode during the next acknowledge cycle. Setting this bit to 1 instructs the transmitting device to stop sending data, since the receiver either does not need, or cannot receive, any more data. This bit is cleared after the first acknowledge cycle. This bit is ignored when in transmit mode.

GCMEN — The Global Call Match Enable bit enables the match of an incoming address byte to the general call address (Start Condition followed by address byte of 00h) while the ACB is in slave mode. When cleared, the ACB does not respond to a global call.
0 – Global call matching disabled.
1 – Global call matching enabled.

NMINTE — The New Match Interrupt Enable controls whether ACB interrupts are generated on new matches. Set the NMINTE bit to enable the interrupt on a new match (i.e., when ACBST.NMATCH is set). The interrupt is issued only if the ACBCTL1.INTEN bit is set.
0 – New match interrupts disabled.
1 – New match interrupts enabled.

STASTRE — The Stall After Start Enable bit enables the stall after start mechanism. When enabled, the ACB is stalled after the address byte. When the STASTRE bit is clear, the ACBST.STASTR bit is always clear.
0 – No stall after start.
1 – Stall-after-start enabled.

21.3.5 ACB Control Register 2 (ACBCTL2)

The ACBCTL2 register is a byte-wide, read/write register that controls the module and selects the ACB clock rate. At reset, the ACBCTL2 register is cleared.

7 … 1	0
SCLFRQ6:0	ENABLE

ENABLE — The Enable bit controls the ACB module. When this bit is set, the ACB module is enabled. When the Enable bit is clear, the ACB module is disabled, the ACBCTL1, ACBST, and ACBCST registers are cleared, and the clocks are halted.
0 – ACB module disabled.
1 – ACB module enabled.

SCLFRQ — The SCL Frequency field specifies the SCL period (low time and high time) in master mode. The clock low time and high time are defined as follows:
$t_{SCLl} = t_{SCLh} = 2 \times SCLFRQ \times t_{CLK}$
Where t_{CLK} is this device's clock period when in Active mode. The SCLFRQ field may be programmed to values in the range of 0001000b through 1111111b. Using any other value has unpredictable results.

21.3.6 ACB Control Register 3 (ACBCTL3)

The ACBCTL3 register is a byte-wide, read/write register that expands the clock prescaler field and enables ARP matches. At reset, the ACBCTL3 register is cleared.

7 … 3	2	1 … 0
Reserved	ARPMEN	SCLFRQ8:7

ARPMEN — The ARP Match Enable bit enables the matching of an incoming address byte to the SMBus ARP address 110 0001b general call address (Start condition followed by address byte of 00h), while the ACB is in slave mode.
0 – ACB does not respond to ARP addresses.
1 – ARP address matching enabled.

SCLFRQ — The SCL Frequency field specifies the SCL period (low time and high time) in master mode. The ACBCTL3 register provides a 2-bit expansion of this field, with the remaining 7 bits being held in the ACBCTL2 register.

21.3.7 ACB Own Address Register 1 (ACBADDR1)

The ACBADDR1 register is a byte-wide, read/write register that holds the module's first ACCESS.bus address. After reset, its value is undefined.

7	6 … 0
SAEN	ADDR

ADDR — The Own Address field holds the first 7-bit ACCESS.bus address of this device. When in slave mode, the first 7 bits received after a Start Condition are compared to this field (first bit received to bit 6, and the last to bit 0). If the address field matches the received data and the SAEN bit is set, a match is detected.

SAEN — The Slave Address Enable bit controls whether address matching is performed in slave mode. When set, the SAEN bit indicates that the ADDR field holds a valid address and enables the match of ADDR to an incoming address byte. When cleared, the ACB does not check for an address match.
0 – Address matching disabled.
1 – Address matching enabled.

21.3.8 ACB Own Address Register 2 (ACBADDR2)

The ACBADDR2 register is a byte-wide, read/write register that holds the module's second ACCESS.bus address. After reset, its value is undefined.

7	6 … 0
SAEN	ADDR

ADDR — The Own Address field holds the second 7-bit ACCESS.bus address of this device. When in slave mode, the first 7 bits received after a Start Condition are compared to this field (first bit received to bit 6, and the last to bit 0). If the address field matches the received data and the SAEN bit is set, a match is detected.

SAEN — The Slave Address Enable bit controls whether address matching is performed in slave mode. When set, the SAEN bit indicates that the ADDR field holds a valid address and enables the match of ADDR to an incoming address byte. When cleared, the ACB does not check for an address match.
0 – Address matching disabled.
1 – Address matching enabled.

21.4 USAGE HINTS

- When the ACB module is disabled, the ACBCST.BB bit is cleared. After enabling the ACB (ACBCTL2.ENABLE = 1) in systems with more than one master, the bus may be in the middle of a transaction with another device, which is not reflected in the BB bit. There is a need to allow the ACB to synchronize to the bus activity status before issuing a request to become the bus master, to prevent bus errors. Therefore, before issuing a request to become the bus master for the first time, software should check that there is no activity on the bus by checking the BB bit after the bus allowed time-out period.
- When waking up from power down, before checking the ACBCST.MATCH bit, test the ACBCST.BUSY bit to make sure that the address transaction has finished.
- The BB bit is intended to solve a deadlock in which two, or more, devices detect a usage conflict on the bus and both devices cease being bus masters at the same time. In this situation, the BB bits of both devices are active (because each deduces that there is another master currently performing a transaction, while in fact no device is executing a transaction), and the bus would stay locked until some device sends a ACBCTL1.STOP condition. The ACBCST.BB bit allows software to monitor bus usage, so it can avoid sending a STOP signal in the middle of the transaction of some other device on the bus. This bit detects whether the bus remains unused over a certain period, while the BB bit is set.
- In some cases, the bus may get stuck with the SCL or SDA lines active. A possible cause is an erroneous Start or Stop Condition that occurs in the middle of a slave receive session. When the SCL signal is stuck active, there is nothing that can be done, and it is the responsibility of the module that holds the bus to release it. When the SDA signal is stuck active, the ACB module enables the release of the bus by using the following sequence. Note that in normal cases, the SCL signal may be toggled only by the bus master. This protocol is a recovery scheme which is an exception that should be used only in the case when there is no other master on the bus. The recovery scheme is as follows:
  1. Disable and re-enable the module to set it into the not addressed slave mode.
  2. Set the ACBCTL1.START bit to make an attempt to issue a Start Condition.
  3. Check if the SDA signal is active (low) by reading ACBCST.TSDA bit. If it is active, issue a single SCL cycle by writing 1 to ACBCST.TGSCL bit. If the SDA line is not active, continue from step 5.
  4. Check if the ACBST.MASTER bit is set, which indicates that the Start Condition was sent. If not, repeat step 3 and 4 until the SDA signal is released.
  5. Clear the BB bit. This enables the START bit to be executed. Continue according to "Bus Idle Error Recovery" on page 151.

22.0 Timing and Watchdog Module

The Timing and Watchdog Module (TWM) generates the clocks and interrupts used for timing periodic functions in the system; it also provides Watchdog protection over software execution.

The TWM is designed to provide flexibility in system design by configuring various clock ratios and by selecting the Watchdog clock source. After setting the TWM configuration, software can lock it for a higher level of protection against erroneous software action. Once the TWM is locked, only reset can release it.

22.1 TWM STRUCTURE

Figure 87 is a block diagram showing the internal structure of the Timing and Watchdog module. There are two main sections: the Real-Time Timer (T0) section at the top and the Watchdog section on the bottom.

All counting activities of the module are based on the Slow Clock (SLCLK). A prescaler counter divides this clock to make a slower clock. The prescaler factor is defined by a 3-bit field in the Timer and Watchdog Prescaler register, which selects either 1, 2, 4, 8, 16, or 32 as the divisor. Therefore, the prescaled clock period can be 2, 4, 8, 16, or 32 times the Slow Clock period. The prescaled clock signal is called T0IN.

22.2 TIMER T0 OPERATION

Timer T0 is a programmable 16-bit down counter that can be used as the time base for real-time operations such as a periodic audible tick. It can also be used to drive the Watchdog circuit.

The timer starts counting from the value loaded into the TWMT0 register and counts down on each rising edge of T0IN. When the timer reaches zero, it is automatically reloaded from the TWMT0 register and continues counting down from that value. Therefore, the frequency of the timer is:

f_{SLCLK} / [(TWMT0 + 1) × prescaler]

When an external crystal oscillator is used as the SLCLK source or when the fast clock is divided accordingly, f_{SLCLK} is 32.768 kHz.

The value stored in TWMT0 can range from 0001h to FFFFh.

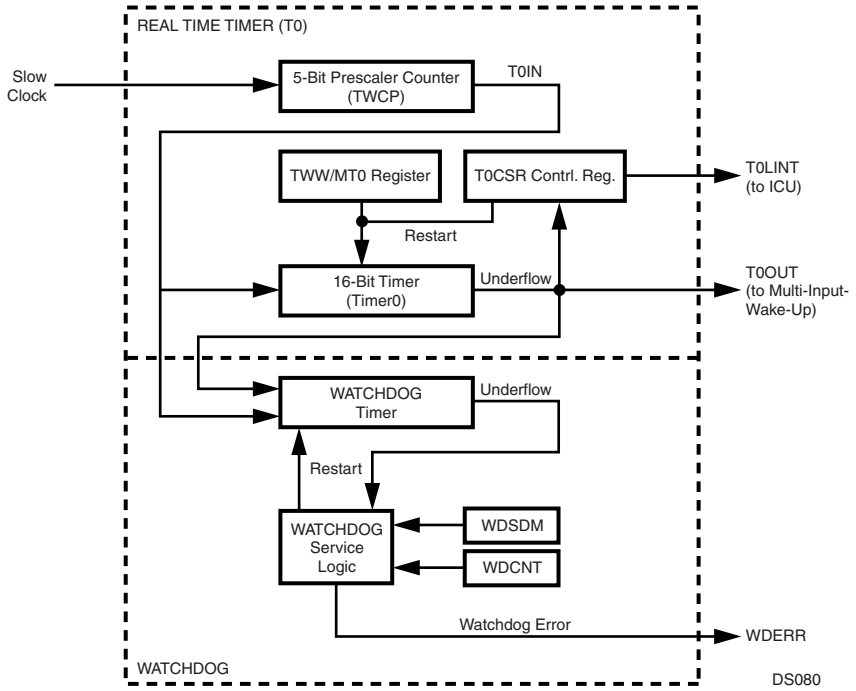

Figure 87. Timing and Watchdog Module Block Diagram

When the counter reaches zero, an internal timer signal called T0OUT is set for one T0IN clock cycle. This signal sets the TC bit in the TWMT0 Control and Status Register (T0CSR). It also generates an interrupt (IRQ14), when enabled by the T0CSR.T0INTE bit. T0OUT is also an input to the MIWU (see Section 13.0), so an edge-triggered interrupt is also available through this alternative mechanism.

If software loads the TWMT0 register with a new value, the timer uses that value the next time that it reloads the 16-bit timer register (in other words, after reaching zero). Software can restart the timer at any time (on the very next edge of the T0IN clock) by setting the Restart (RST) bit in the T0CSR register. The T0CSR.RST bit is cleared automatically upon restart of the 16-bit timer.

Note: If software wishes to switch to Power Save or Idle mode after setting the T0CSR.RST bit, software must wait for the reset operation to complete before performing the switch.

22.3 WATCHDOG OPERATION

The Watchdog is an 8-bit down counter that operates on the rising edge of a specified clock source. At reset, the Watchdog is disabled; it does not count and no Watchdog signal is generated. A write to either the Watchdog Count (WDCNT) register or the Watchdog Service Data Match (WDSDM) register starts the counter. The Watchdog counter counts down from the value programmed in the WDCNT register. Once started, only a reset can stop the Watchdog from operating.

The Watchdog can be programmed to use either T0OUT or T0IN as its clock source (the output and input of Timer T0, respectively). The TWCFG.WDCT0I bit controls this clock selection.

Software must periodically "service" the Watchdog. There are two ways to service the Watchdog, the choice depending on the programmed value of the WDSDME bit in the Timer and Watchdog Configuration (TWCFG) register.

If the TWCFG.WDSDME bit is clear, the Watchdog is serviced by writing a value to the WDCNT register. The value written to the register is reloaded into the Watchdog counter. The counter then continues counting down from that value.

If the TWCFG.WDSDME bit is set, the Watchdog is serviced by writing the value 5Ch to the Watchdog Service Data Match (WDSDM) register. This reloads the Watchdog counter with the value previously programmed into the WDCNT register. The counter then continues counting down from that value.

A Watchdog error signal is generated by any of the following events:

- The Watchdog serviced too late.
- The Watchdog serviced too often.
- The WDSDM register is written with a value other than 5Ch when WDSDM type servicing is enabled (TWCFG.WDSDME = 1).

A Watchdog error condition resets the device.

22.3.1 Register Locking

The Timer and Watchdog Configuration (TWCFG) register is used to set the Watchdog configuration. It controls the Watchdog clock source (T0IN or T0OUT), the type of Watchdog servicing (using WDCNT or WDSDM), and the locking state of the TWCFG, TWCPR, TIMER0, T0CSR, and WDCNT registers. A register that is locked cannot be read or written. A write operation is ignored and a read operation returns unpredictable results.

If the TWCFG register is itself locked, it remains locked until the device is reset. Any other locked registers also remain locked until the device is reset. This feature prevents a runaway program from tampering with the programmed Watchdog function.

22.3.2 Power Save Mode Operation

The Timer and Watchdog Module is active in both the Power Save and Idle modes. The clocks and counters continue to operate normally in these modes. The WDSDM register is accessible in the Power Save and Idle modes, but the other TWM registers are accessible only in the Active mode. Therefore, Watchdog servicing must be carried out using the WDSDM register in the Power Save or Idle mode.

In the Halt mode, the entire device is frozen, including the Timer and Watchdog Module. On return to Active mode, operation of the module resumes at the point at which it was stopped.

Note: After a restart or Watchdog service through WDCNT, do not enter Power Save mode for a period equivalent to 5 Slow Clock cycles.

22.4 TWM REGISTERS

The TWM registers controls the operation of the Timing and Watchdog Module. There are six such registers:

Table 65 TWM Registers

Name	Address	Description
TWCFG	FF FF20h	Timer and Watchdog Configuration Register
TWCP	FF FF22h	Timer and Watchdog Clock Prescaler Register
TWMT0	FF FF24h	TWM Timer 0 Register
T0CSR	FF FF26h	TWMT0 Control and Status Register
WDCNT	FF FF28h	Watchdog Count Register
WDSDM	FF FF2Ah	Watchdog Service Data Match Register

The WDSDM register is accessible in both Active and Power Save mode. The other TWM registers are accessible only in Active mode.

22.4.1 Timer and Watchdog Configuration Register (TWCFG)

The TWCFG register is a byte-wide, read/write register that selects the Watchdog clock input and service method, and also allows the Watchdog registers to be selectively locked. A locked register cannot be read or written; a read operation returns unpredictable values and a write operation is ignored. Once a lock bit is set, that bit cannot be cleared until the device is reset. At reset, the non-reserved bits of the register are cleared. The register format is shown below.

7 6	5	4	3	2	1	0
Res.	WDSDME	WDCT0I	LWDCNT	LTWMT0	LTWCP	LTWCFG

LTWCFG The Lock TWCFG Register bit controls access to the TWCFG register. When clear, access to the TWCFG register is allowed. When set, the TWCFG register is locked.
0 – TWCFG register unlocked.
1 – TWCFG register locked.

LTWCP The Lock TWCP Register bit controls access to the TWCP register. When clear, access to the TWCP register is allowed. When set, the TWCP register is locked.
0 – TWCP register unlocked.
1 – TWCP register locked.

LTWMT0 The Lock TWMT0 Register bit controls access to the TWMT0 register. When clear, access to the TWMT0 and T0CSR registers are allowed. When set, the TWMT0 and T0CSR registers are locked.
0 – TWMT0 register unlocked.
1 – TWMT0 register locked.

LWDCNT The Lock LDWCNT Register bit controls access to the LDWCNT register. When clear, access to the LDWCNT register is allowed. When set, the LDWCNT register is locked.
0 – LDWCNT register unlocked.
1 – LDWCNT register locked.

WDCT0I The Watchdog Clock from T0IN bit selects the clock source for the Watchdog timer. When clear, the T0OUT signal (the output of Timer T0) is used as the Watchdog clock. When set, the T0IN signal (the prescaled Slow Clock) is used as the Watchdog clock.
0 – Watchdog timer is clocked by T0OUT.
1 – Watchdog timer is clocked by T0IN.

WDSDME The Watchdog Service Data Match Enable bit controls which method is used to service the Watchdog timer. When clear, Watchdog servicing is accomplished by writing a count value to the WDCNT register; write operations to the Watchdog Service Data Match (WDSDM) register are ignored. When set, Watchdog servicing is accomplished by writing the value 5Ch to the WDSDM register.
0 – Write a count value to the WDCNT register to service the Watchdog timer.
1 – Write 5Ch to the WDSDM register to service the Watchdog timer.

22.4.2 Timer and Watchdog Clock Prescaler Register (TWCP)

The TWCP register is a byte-wide, read/write register that specifies the prescaler value used for dividing the low-frequency clock to generate the T0IN clock. At reset, the non-reserved bits of the register are cleared. The register format is shown below.

7 3	2 0
Reserved	MDIV

MDIV Main Clock Divide. This 3-bit field defines the prescaler factor used for dividing the low speed device clock to create the T0IN clock. The allowed 3-bit values and the corresponding clock divisors and clock rates are listed below.

MDIV	Clock Divisor (f_{SCLK} = 32.768 kHz)	T0IN Frequency
000	1	32.768 kHz
001	2	16.384 kHz
010	4	8.192 kHz
011	8	4.096 kHz
100	16	2.056 kHz
101	32	1.024 kHz
Other	Reserved	N/A

22.4.3 TWM Timer 0 Register (TWMT0)

The TWMT0 register is a word-wide, read/write register that defines the T0OUT interrupt rate. At reset, TWMT0 register is initialized to FFFFh. The register format is shown below.

15 0
PRESET

PRESET The Timer T0 Preset field holds the value used to reload Timer T0 on each underflow. Therefore, the frequency of the Timer T0 interrupt is the frequency of T0IN divided by (PRESET+1). The allowed values of PRESET are 0001h through FFFFh.

22.4.4 TWMT0 Control and Status Register (T0CSR)

The T0CSR register is a byte-wide, read/write register that controls Timer T0 and shows its current status. At reset, the non-reserved bits of the register are cleared. The register format is shown below.

7 – 5	4	3	2	1	0
Reserved	FRZT0E	WDLTD	T0INTE	TC	RST

RST — The Restart bit is used to reset Timer T0. When this bit is set, it forces the timer to reload the value in the TWMT0 register on the next rising edge of the selected input clock. The RST bit is reset automatically by the hardware on the same rising edge of the selected input clock. Writing a 0 to this bit position has no effect. At reset, the non-reserved bits of the register are cleared.
0 – Writing 0 has no effect.
1 – Writing 1 resets Timer T0.

TC — The Terminal Count bit is set by hardware when the Timer T0 count reaches zero and is cleared when software reads the T0CSR register. It is a read-only bit. Any data written to this bit position is ignored. The TC bit is not cleared if FREEZE mode is asserted by an external debugging system.
0 – Timer T0 did not count down to 0.
1 – Timer T0 counted down to 0.

T0INTE — The Timer T0 Interrupt Enable bit enables an interrupt to the CPU each time the Timer T0 count reaches zero. When this bit is clear, Timer T0 interrupts are disabled.
0 – Timer T0 interrupts disabled.
1 – Timer T0 interrupts enabled.

WDLTD — The Watchdog Last Touch Delay bit is set when either WDCNT or WDSDM is written and the data transfer to the Watchdog is in progress (see WDCNT and WDSDM register description). When clear, it is safe to switch to Power Save mode.
0 – No data transfer to the Watchdog is in progress, safe to enter Power Save mode.
1 – Data transfer to the Watchdog in progress.

FRZT0E — The Freeze Timer0 Enable bit controls whether TImer 0 is stopped in FREEZE mode. If this bit is set, the Timer 0 is frozen (stopped) when the FREEZE input to the TWM is asserted. If the FRZT0E bit is clear, only the Watchdog timer is frozen by asserting the FREEZE input signal. After reset, this bit is clear.
0 – Timer T0 unaffected by FREEZE mode.
1 – Timer T0 stopped in FREEZE mode.

22.4.5 Watchdog Count Register (WDCNT)

The WDCNT register is a byte-wide, write-only register that holds the value that is loaded into the Watchdog counter each time the Watchdog is serviced. The Watchdog is started by the first write to this register. Each successive write to this register restarts the Watchdog count with the written value. At reset, this register is initialized to 0Fh.

7 – 0
PRESET

22.4.6 Watchdog Service Data Match Register (WDSDM)

The WSDSM register is a byte-wide, write-only register used for servicing the Watchdog. When this type of servicing is enabled (TWCFG.WDSDME = 1), the Watchdog is serviced by writing the value 5Ch to the WSDSM register. Each such servicing reloads the Watchdog counter with the value previously written to the WDCNT register. Writing any data other than 5Ch triggers a Watchdog error. Writing to the register more than once in one Watchdog clock cycle also triggers a Watchdog error signal. If this type of servicing is disabled (TWCFG.WDSDME = 0), any write to the WSDSM register is ignored.

7 – 0
RSTDATA

22.5 WATCHDOG PROGRAMMING PROCEDURE

The highest level of protection against software errors is achieved by programming and then locking the Watchdog registers and using the WDSDM register for servicing. This is the procedure:

1. Write the desired values into the TWM Clock Prescaler register (TWCP) and the TWM Timer 0 register (TWMT0) to control the T0IN and T0OUT clock rates. The frequency of T0IN can be programmed to any of six frequencies ranging from $1/32 \times f_{SLCLK}$ to f_{SLCLK}. The frequency of T0OUT is equal to the frequency of T0IN divided by (1+ PRESET), in which PRESET is the value written to the TWMT0 register.
2. Configure the Watchdog clock to use either T0IN or T0OUT by setting or clearing the TWCFG.WDCT0I bit.
3. Write the initial value into the WDCNT register. This starts operation of the Watchdog and specifies the maximum allowed number of Watchdog clock cycles between service operations.
4. Set the T0CSR.RST bit to restart the TWMT0 timer.
5. Lock the Watchdog registers and enable the Watchdog Service Data Match Enable function by setting bits 0, 1, 2, 3, and 5 in the TWCFG register.
6. Service the Watchdog by periodically writing the value 5Ch to the WDSDM register at an appropriate rate. Servicing must occur at least once per period programmed into the WDCNT register, but no more than once in a single Watchdog input clock cycle.

23.0 Multi-Function Timer

The Multi-Function Timer module contains a pair of 16-bit timer/counters. Each timer/counter unit offers a choice of clock sources for operation and can be configured to operate in any of the following modes:

- Processor-Independent Pulse Width Modulation (PWM) mode, which generates pulses of a specified width and duty cycle, and which also provides a general-purpose timer/counter.
- Dual-Input Capture mode, which measures the elapsed time between occurrences of external events, and which also provides a general-purpose timer/counter.
- Dual Independent Timer mode, which generates system timing signals or counts occurrences of external events.
- Single-Input Capture and Single Timer mode, which provides one external event counter and one system timer.

The timer unit uses two I/O pins, called TA and TB. The timer I/O pins are alternate functions of the PI7 and PG4 port pins, respectively. (The PG4/TB pin is only available on the 100-pin package.)

23.1 TIMER STRUCTURE

Figure 88 is a block diagram showing the internal structure of the MFT. There are two main functional blocks: a Timer/Counter and Action block and a Clock Source block. The Timer/Counter and Action block contains two separate timer/counter units, called Timer/Counter 1 and Timer/Counter 2.

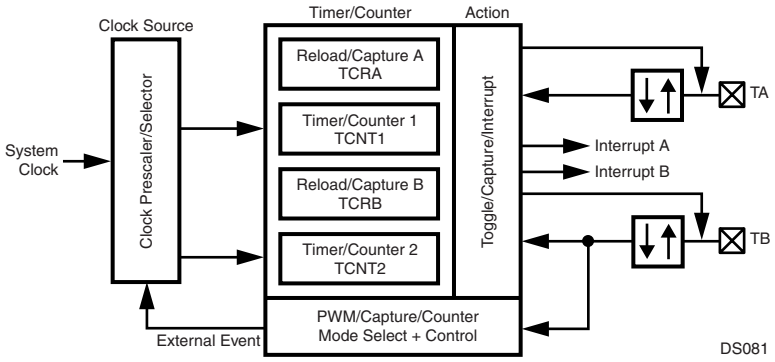

Figure 88. Multi-Function Timer Block Diagram

23.1.1 Timer/Counter Block

The Timer/Counter block contains the following functional blocks:

- Two 16-bit counters, Timer/Counter 1 (TCNT1) and Timer/Counter 2 (TCNT2)
- Two 16-bit reload/capture registers, TCRA and TCRB
- Control logic necessary to configure the timer to operate in any of the four operating modes
- Interrupt control and I/O control logic

In a power-saving mode that uses the low-frequency (32.768 kHz) clock as the System Clock, the synchronization circuit requires that the Slow Clock operate at no more than one-fourth the speed of the 32.768 kHz System Clock.

23.1.2 Clock Source Block

The Clock Source block generates the signals used to clock the two timer/counter registers. The internal structure of the Clock Source block is shown in Figure 89.

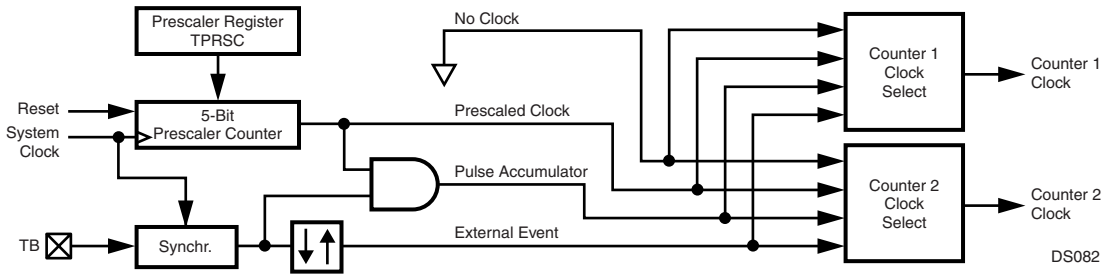

Figure 89. Multi-Function Timer Clock Source

Counter Clock Source Select

There are two clock source selectors that allow software to independently select the clock source for each of the two 16-bit counters from any one of the following sources:

- No clock (which stops the counter)
- Prescaled System Clock
- External event count based on TB
- Pulse accumulate mode based on TB
- Slow Clock (derived from the low-frequency oscillator or divided from the high-speed oscillator)

Prescaler

The 5-bit clock prescaler allows software to run the timer with a prescaled clock signal. The prescaler consists of a 5-bit read/write prescaler register (TPRSC) and a 5-bit down counter. The System Clock is divided by the value contained in the prescaler register plus 1. Therefore, the timer clock period can be set to any value from 1 to 32 divisions of the System Clock period. The prescaler register and down counter are both cleared upon reset.

External Event Clock

The TB I/O pin can be configured to operate as an external event input clock for either of the two 16-bit counters. This input can be programmed to detect either rising or falling edges. The minimum pulse width of the external signal is one System Clock cycle. This means that the maximum frequency at which the counter can run in this mode is one-half of the System Clock frequency. This clock source is not available in the capture modes (modes 2 and 4) because the TB pin is used as one of the two capture inputs.

Pulse Accumulate Mode

The counter can also be configured to count prescaler output clock pulses when the TB input is high and not count when the TB input is low, as illustrated in Figure 90. The resulting count is an indicator of the cumulative time that the TB input is high. This is called the “pulse-accumulate” mode. In this mode, an AND gate generates a clock signal for the counter whenever a prescaler clock pulse is generated and the TB input is high. (The polarity of the TB signal is programmable, so the counter can count when the TB input is low rather than high.) The pulse-accumulate mode is not available in the capture modes (modes 2 and 4) because the TB pin is used as one of the two capture inputs.

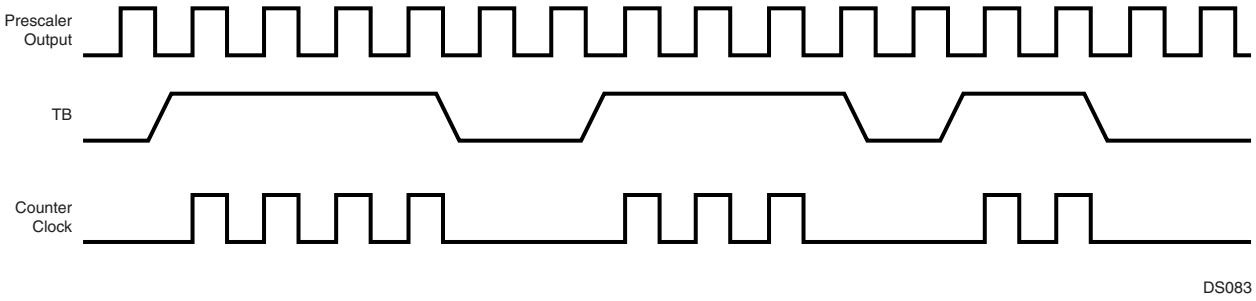

Figure 90. Pulse-Accumulate Mode

Slow Clock

The Slow Clock is generated by the Triple Clock and Reset module. The clock source is either the divided fast clock or the external 32.768 kHz crystal oscillator (if available and selected). The Slow Clock can be used as the clock source for the two 16-bit counters. Because the Slow Clock can be asynchronous to the System Clock, a circuit is provided to synchronize the clock signal to the high-frequency System Clock before it is used for clocking the counters. The synchronization circuit requires that the Slow Clock operate at no more than one-fourth the speed of the System Clock.

Limitations in Low-Power Modes

The Power Save mode uses the Slow Clock as the System Clock. In this mode, the Slow Clock cannot be used as a clock source for the timers because that would drive both clocks at the same frequency, and the clock ratio needed for synchronization to the System Clock would not be maintained. However, the External Event Clock and Pulse Accumulate Mode will still work, as long as the external event pulses are at least the size of the whole slow-clock period. Using the prescaled System Clock will also work, but at a much slower rate than the original System Clock.

Idle and Halt modes stop the System Clock (the high-frequency and/or low-frequency clock) completely. If the System Clock is stopped, the timer stops counting until the System Clock resumes operation.

In the Idle or Halt mode, the System Clock stops completely, which stops the operation of the timers. In that case, the timers stop counting until the System Clock resumes operation.

23.2 TIMER OPERATING MODES

Each timer/counter unit can be configured to operate in any of the following modes:

- Processor-Independent Pulse Width Modulation (PWM) mode
- Dual-Input Capture mode
- Dual Independent Timer mode
- Single-Input Capture and Single Timer mode

At reset, the timers are disabled. To configure and start the timers, software must write a set of values to the registers that control the timers. The registers are described in Section 23.5.

23.2.1 Mode 1: Processor-Independent PWM

Mode 1 is the Processor-Independent Pulse Width Modulation (PWM) mode, which generates pulses of a specified width and duty cycle, and which also provides a separate general-purpose timer/counter.

Figure 91 is a block diagram of the Multi-Function Timer configured to operate in Mode 1. Timer/Counter 1 (TCNT1) functions as the time base for the PWM timer. It counts down at the clock rate selected for the counter. When an underflow occurs, the timer register is reloaded alternately from the TCRA and TCRB registers, and counting proceeds downward from the loaded value.

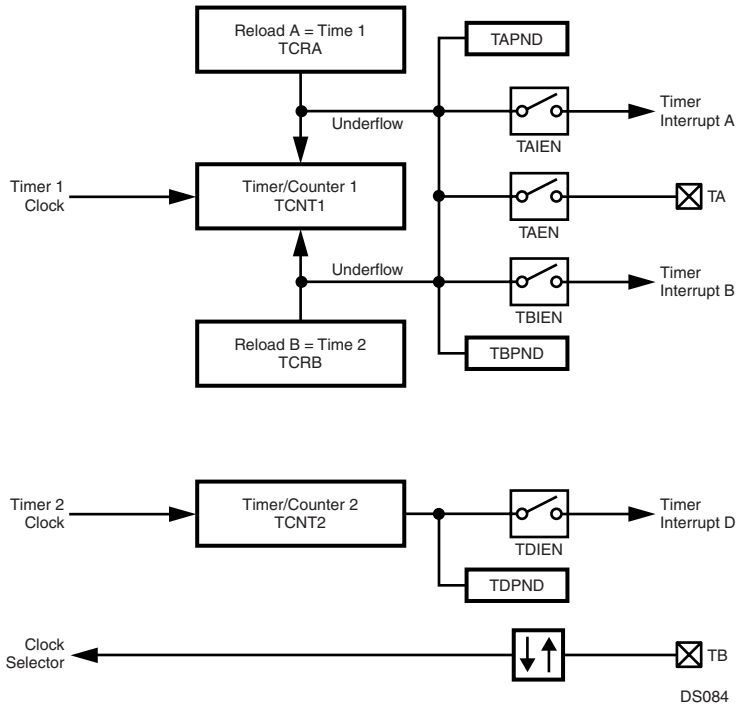

Figure 91. Processor-Independent PWM Mode

On the first underflow, the timer is loaded from the TCRA register, then from the TCRB register on the next underflow, then from the TCRA register again on the next underflow, and so on. Every time the counter is stopped and restarted, it always obtains its first reload value from the TCRA register. This is true whether the timer is restarted upon reset, after entering Mode 1 from another mode, or after stopping and restarting the clock with the Timer/Counter 1 clock selector.

The timer can be configured to toggle the TA output bit on each underflow. This generates a clock signal on the TA output with the width and duty cycle determined by the values stored in the TCRA and TCRB registers. This is a “processor-independent” PWM clock because once the timer is set up, no more action is required from the CPU to generate a continuous PWM signal.

The timer can be configured to generate separate interrupts upon reload from the TCRA and TCRB registers. The interrupts can be enabled or disabled under software control. The CPU can determine the cause of each interrupt by looking at the TAPND and TBPND bits, which are updated by the hardware on each occurrence of a timer reload.

In Mode 1, Timer/Counter 2 (TCNT2) can be used either as a simple system timer, an external event counter, or a pulse-accumulate counter. The clock counts down using the clock selected with the Timer/Counter 2 clock selector. It generates an interrupt upon each underflow if the interrupt is enabled with the TDIEN bit.

23.2.2 Mode 2: Dual Input Capture

Mode 2 is the Dual Input Capture mode, which measures the elapsed time between occurrences of external events, and which also provides a separate general-purpose timer/counter.

Figure 92 is a block diagram of the Multi-Function Timer configured to operate in Mode 2. The time base of the capture timer depends on Timer/Counter 1, which counts down using the clock selected with the Timer/Counter 1 clock selector. The TA and TB pins function as capture inputs. A transition received on the TA pin transfers the timer contents to the TCRA register. Similarly, a transition received on the TB pin transfers the timer contents to the TCRB register. Each input pin can be configured to sense either rising or falling edges.

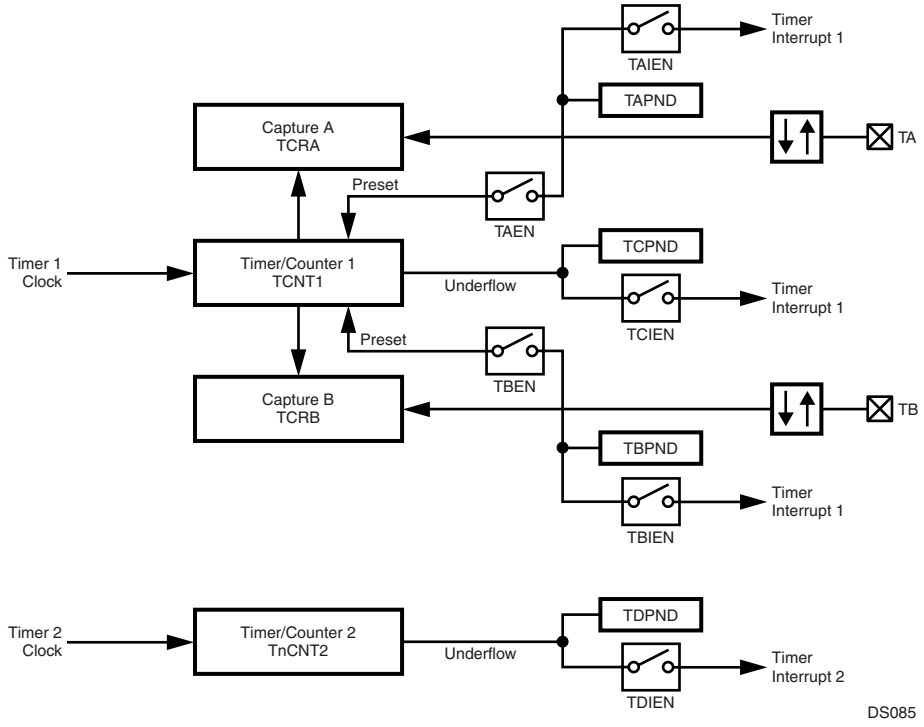

Figure 92. Dual-Input Capture Mode

The TA and TB inputs can be configured to preset the counter to FFFFh on reception of a valid capture event. In this case, the current value of the counter is transferred to the corresponding capture register and then the counter is preset to FFFFh. Using this approach allows software to determine the on-time and off-time and period of an external signal with a minimum of CPU overhead.

The values captured in the TCRA register at different times reflect the elapsed time between transitions on the TA pin. The same is true for the TCRB register and the TB pin. The input signal on the TA or TB pin must have a pulse width equal to or greater than one System Clock cycle.

There are three separate interrupts associated with the capture timer, each with its own enable bit and pending bit. The three interrupt events are reception of a transition on the TA pin, reception of a transition on the TB pin, and underflow of the TCNT1 counter. The enable bits for these events are TAIEN, TBIEN, and TCIEN, respectively.

In Mode 2, Timer/Counter 2 (TCNT2) can be used as a simple system timer. The clock counts down using the clock selected with the Timer/Counter 2 clock selector. It generates an interrupt upon each underflow if the interrupt is enabled with the TDIEN bit.

Neither Timer/Counter 1 (TCNT1) nor Timer/Counter 2 (TCNT2) can be configured to operate as an external event counter or to operate in the pulse-accumulate mode because the TB input is used as a capture input. Attempting to select one of these configurations will cause one or both counters to stop.

23.2.3 Mode 3: Dual Independent Timer/Counter

Mode 3 is the Dual Independent Timer mode, which generates system timing signals or counts occurrences of external events.

Figure 93 is a block diagram of the Multi-Function Timer configured to operate in Mode 3. The timer is configured to operate as a dual independent system timer or dual external event counter. In addition, Timer/Counter 1 can generate a 50% duty cycle PWM signal on the TA pin. The TB pin can be used as an external event input or pulse-accumulate input and can be used as the clock source for either Timer/Counter 1 or Timer/Counter 2. Both counters can also be clocked by the prescaled System Clock.

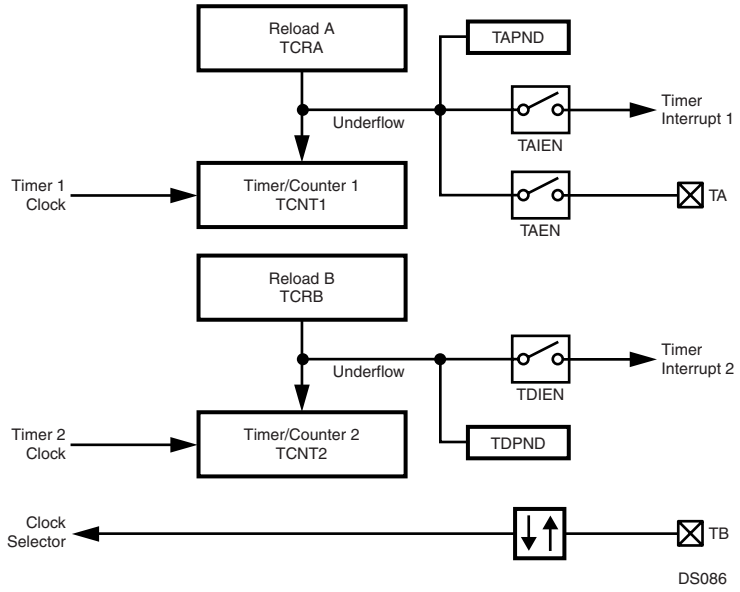

Figure 93. Dual-Independent Timer/Counter Mode

Timer/Counter 1 (TCNT1) counts down at the rate of the selected clock. On underflow, it is reloaded from the TCRA register and counting proceeds down from the reloaded value. In addition, the TA pin is toggled on each underflow if this function is enabled by the TAEN bit. The initial state of the TA pin is software-programmable. When the TA pin is toggled from low to high, it sets the TCPND interrupt pending bit and also generates an interrupt if enabled by the TAIEN bit.

Because the TA pin toggles on every underflow, a 50% duty cycle PWM signal can be generated on the TA pin without any further action from the CPU.

Timer/Counter 2 (TCNT2) counts down at the rate of the selected clock. On underflow, it is reloaded from the TCRB register and counting proceeds down from the reloaded value. In addition, each underflow sets the TDPND interrupt pending bit and generates an interrupt if the interrupt is enabled by the TDIEN bit.

23.2.4 Mode 4: Input Capture Plus Timer

Mode 4 is the Single Input Capture and Single Timer mode, which provides one external event counter and one system timer.

Figure 94 is a block diagram of the Multi-Function Timer configured to operate in Mode 4. This mode offers a combination of Mode 3 and Mode 2 functions. Timer/Counter 1 is used as a system timer as in Mode 3 and Timer/Counter 2 is used as a capture timer as in Mode 2, but with a single input rather than two inputs.

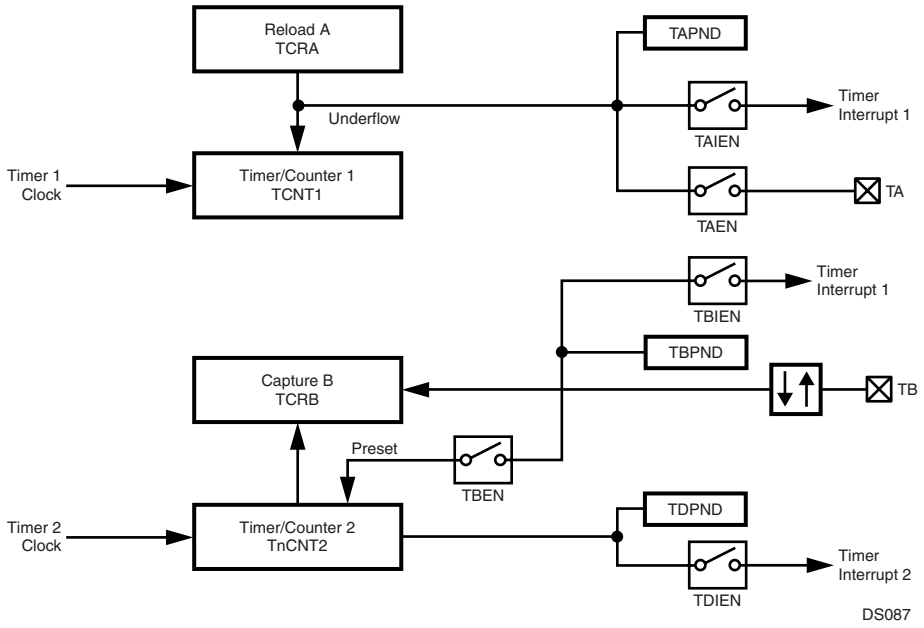

Figure 94. Input Capture Plus Timer Mode

Timer/Counter 1 (TCNT1) operates the same as in Mode 3. It counts down at the rate of the selected clock. On underflow, it is reloaded from the TCRA register and counting proceeds down from the reloaded value. The TA pin is toggled on each underflow, when this function is enabled by the TAEN bit. When the TA pin is toggled from low to high, it sets the TCPND interrupt pending bit and also generates an interrupt if the interrupt is enabled by the TAIEN bit. A 50% duty cycle PWM signal can be generated on TA without any further action from the CPU.

Timer/Counter 2 (TCNT1) counts down at the rate of the selected clock. The TB pin functions as the capture input. A transition received on TB transfers the timer contents to the TCRB register. The input pin can be configured to sense either rising or falling edges.

The TB input can be configured to preset the counter to FFFFh on reception of a valid capture event. In this case, the current value of the counter is transferred to the capture register and then the counter is preset to FFFFh.

The values captured in the TCRB register at different times reflect the elapsed time between transitions on the TA pin. The input signal on TB must have a pulse width equal to or greater than one System Clock cycle.

There are two separate interrupts associated with the capture timer, each with its own enable bit and pending bit. The two interrupt events are reception of a transition on TB and underflow of the TCNT2 counter. The enable bits for these events are TBIEN and TDIEN, respectively.

Neither Timer/Counter 1 (TCNT1) nor Timer/Counter 2 (TCNT2) can be configured to operate as an external event counter or to operate in the pulse-accumulate mode because the TB input is used as a capture input. Attempting to select one of these configurations will cause one or both counters to stop. In this mode, Timer/Counter 2 must be enabled at all times.

23.3 TIMER INTERRUPTS

The Multi-Function Timer unit has four interrupt sources, designated A, B, C, and D. Interrupt sources A, B, and C are mapped into a single system interrupt called Timer Interrupt 1, while interrupt source D is mapped into a system interrupt called Timer Interrupt 2. Each of the four interrupt sources has its own enable bit and pending bit. The enable bits are named TAIEN, TBIEN, TCIEN, and TDIEN. The pending bits are named TAPND, TBPND, TCPND, and TDPND.

Timer Interrupts 1 and 2 are system interrupts TA and TB (IRQ14 and IRQ13), respectively.

Table 66 shows the events that trigger interrupts A, B, C, and D in each of the four operating modes. Note that some interrupt sources are not used in some operating modes.

23.4 TIMER I/O FUNCTIONS

The Multi-Function Timer unit uses two I/O pins, called TA and TB. The function of each pin depends on the timer operating mode and the TAEN and TBEN enable bits. Table 67 shows the functions of the pins in each operating mode, and for each combination of enable bit settings.

When the TA pin is configured to operate as a PWM output (TAEN = 1), the state of the pin is toggled on each underflow of the TCNT1 counter. In this case, the initial value on the pin is determined by the TAOUT bit. For example, to start with TA high, software must set the TAOUT bit before enabling the timer clock. This option is available only when the timer is configured to operate in Mode 1, 3, or 4 (in other words, when TCRA is not used in Capture mode).

Table 66 Timer Interrupts Overview

Sys. Int.	Interrupt Pending Bit	Mode 1	Mode 2	Mode 3	Mode 4
		PWM + Counter	Dual Input Capture + Counter	Dual Counter	Single Capture + Counter
Timer Int. 1 (TA Int.)	TAPND	TCNT1 reload from TCRA	Input capture on TA transition	TCNT1 reload from TCRA	TCNT1 reload from TCRA
	TBPND	TCNT1 reload from TCRB	Input Capture on TB transition	N/A	Input Capture on TB transition
	TCPND	N/A	TCNT1 underflow	N/A	N/A
Timer Int. 2 (TB Int.)	TDPND	TCNT2 underflow	TCNT2 underflow	TCNT2 reload from TCRB	TCNT2 underflow

Table 67 Timer I/O Functions

I/O	TAEN TBEN	Mode 1	Mode 2	Mode 3	Mode 4
		PWM + Counter	Dual Input Capture + counter	Dual Counter	Single Capture + counter
TA	TAEN = 0 TBEN = X	No Output	Capture TCNT1 into TCRA	No Output Toggle	No Output Toggle
	TAEN = 1 TBEN = X	Toggle Output on Underflow of TCNT1	Capture TCNT1 into TCRA and Preset TCNT1	Toggle Output on Underflow of TCNT1	Toggle Output on Underflow of TCNT1
TB	TAEN = X TBEN = 0	Ext. Event or Pulse Accumulate Input	Capture TCNT1 into TCRB	Ext. Event or Pulse Accumulate Input	Capture TCNT2 into TCRB
	TAEN = X TBEN = 1	Ext. Event or Pulse Accumulate Input	Capture TCNT1 into TCRB and Preset TCNT1	Ext. Event or Pulse Accumulate Input	Capture TCNT2 into TCRB and Preset TCNT2

23.5 TIMER REGISTERS

Table 68 lists the CPU-accessible registers used to control the Multi-Function Timers.

Table 68 Multi-Function Timer Registers

Name	Address	Description
TPRSC	FF FF48h	Clock Prescaler Register
TCKC	FF FF4Ah	Clock Unit Control Register
TCNT1	FF FF40h	Timer/Counter 1 Register
TCNT2	FF FF46h	Timer/Counter 2 Register
TCRA	FF FF42h	Reload/Capture A Register
TCRB	FF FF44h	Reload/Capture B Register
TCTRL	FF FF4Ch	Timer Mode Control Register
TICTL	FF FF4Eh	Timer Interrupt Control Register
TICLR	FF FF50h	Timer Interrupt Clear Register

23.5.1 Clock Prescaler Register (TPRSC)

The TPRSC register is a byte-wide, read/write register that holds the current value of the 5-bit clock prescaler (CLKPS). This register is cleared on reset. The register format is shown below.

7 – 5	4 – 0
Reserved	CLKPS

CLKPS The Clock Prescaler field specifies the divisor used to generate the Timer Clock from the System Clock. When the timer is configured to use the prescaled clock, the System Clock is divided by (CLKPS + 1) to produce the timer clock. Therefore, the System Clock divisor can range from 1 to 32.

23.5.2 Clock Unit Control Register (TCKC)

The TCKC register is a byte-wide, read/write register that selects the clock source for each timer/counter. Selecting the clock source also starts the counter. This register is cleared on reset, which disables the timer/counters. The register format is shown below.

7 – 6	5 – 3	2 – 0
Reserved	C2CSEL	C1CSEL

C1CSEL The Counter 1 Clock Select field specifies the clock mode for Timer/Counter 1 as follows:
- 000 – No clock (Timer/Counter 1 stopped, modes 1, 2, and 3 only).
- 001 – Prescaled System Clock.
- 010 – External event on TB (modes 1 and 3 only).
- 011 – Pulse-accumulate mode based on TB (modes 1 and 3 only).
- 100 – Slow Clock.*
- 101 – Reserved.
- 110 – Reserved.
- 111 – Reserved.

C2CSEL The Counter 2 Clock Select field specifies the clock mode for Timer/Counter 2 as follows:
- 000 – No clock (Timer/Counter 2 stopped, modes 1, 2, and 3 only).
- 001 – Prescaled System Clock.
- 010 – External event on TB (modes 1 and 3 only).
- 011 – Pulse-accumulate mode based on TB (modes 1 and 3 only).
- 100 – Slow Clock*
- 101 – Reserved.
- 110 – Reserved.
- 111 – Reserved.

* Operation of the Slow Clock is determined by the CRCTRL.SCLK control bit, as described in Section 11.8.1.

23.5.3 Timer/Counter 1 Register (TCNT1)

The TCNT1 register is a word-wide, read/write register that holds the current count value for Timer/Counter 1. The register contents are not affected by a reset and are unknown after power-up.

15 – 0
TCNT1

23.5.4 Timer/Counter 2 Register (TCNT2)

The TCNT2 register is a word-wide, read/write register that holds the current count value for Timer/Counter 2. The register contents are not affected by a reset and are unknown after power-up.

15 – 0
TCNT2

23.5.5 Reload/Capture A Register (TCRA)

The TCRA register is a word-wide, read/write register that holds the reload or capture value for Timer/Counter 1. The register contents are not affected by a reset and are unknown after power-up.

15	0
TCRA	

23.5.6 Reload/Capture B Register (TCRB)

The TCRB register is a word-wide, read/write register that holds the reload or capture value for Timer/Counter 2. The register contents are not affected by a reset and are unknown after power-up.

15	0
TCRB	

23.5.7 Timer Mode Control Register (TCTRL)

The TCTRL register is a byte-wide, read/write register that sets the operating mode of the timer/counter and the TA and TB pins. This register is cleared at reset. The register format is shown below.

7	6	5	4	3	2	1	0
TEN	TAOUT	TBEN	TAEN	TBEDG	TAEDG	MDSEL	

MDSEL — The Mode Select field sets the operating mode of the timer/counter as follows:
- 00 – Mode 1: PWM plus system timer.
- 01 – Mode 2: Dual-Input Capture plus system timer.
- 10 – Mode 3: Dual Timer/Counter.
- 11 – Mode 4: Single-Input Capture and Single Timer.

TAEDG — The TA Edge Polarity bit selects the polarity of the edges that trigger the TA input.
- 0 – TA input is sensitive to falling edges (high to low transitions).
- 1 – TA input is sensitive to rising edges (low to high transitions).

TBEDG — The TB Edge Polarity bit selects the polarity of the edges that trigger the TB input. In pulse-accumulate mode, when this bit is set, the counter is enabled only when TB is high; when this bit is clear, the counter is enabled only when TB is low.
- 0 – TB input is sensitive to falling edges (high to low transitions).
- 1 – TB input is sensitive to rising edges (low to high transitions).

TAEN — The TA Enable bit controls whether the TA pin is enabled to operate as a preset input or as a PWM output, depending on the timer operating mode. In Mode 2 (Dual Input Capture), a transition on the TA pin presets the TCNT1 counter to FFFFh. In the other modes, TA functions as a PWM output. When this bit is clear, operation of the pin for the timer/counter is disabled.
- 0 – TA input disabled.
- 1 – TA input enabled.

TBEN — The TB Enable bit controls whether the TB pin in enabled to operate in Mode 2 (Dual Input Capture) or Mode 4 (Single Input Capture and Single Timer). A transition on the TB pin presets the corresponding timer/counter to FFFFh (TCNT1 in Mode 2 or TCNT2 in Mode 4). When this bit is clear, operation of the pin for the timer/counter is disabled. This bit setting has no effect in Mode 1 or Mode 3.
- 0 – TB input disabled.
- 1 – TB input enabled.

TAOUT — The TA Output Data bit indicates the current state of the TA pin when the pin is used as a PWM output. The hardware sets and clears this bit, but software can also read or write this bit at any time and therefore control the state of the output pin. In case of conflict, a software write has precedence over a hardware update. This bit setting has no effect when the TA pin is used as an input.
- 0 – TA pin is low.
- 1 – TA pin is high.

TEN — The Timer Enable bit controls whether the Multi-Function Timer is enabled. When the module is disabled all clocks to the counter unit are stopped to minimize power consumption. For that reason, the timer/counter registers (TCNT1 and TCNT2), the capture/reload registers (TCRA and TCRB), and the interrupt pending bits (TXPND) cannot be written in this mode. Also, the 5-bit clock prescaler and the interrupt pending bits are cleared, and the TA I/O pin becomes an input.
- 0 – Multi-Function Timer is disabled.
- 1 – Multi-Function Timer is enabled.

23.5.8 Timer Interrupt Control Register (TICTL)

The TICTL register is a byte-wide, read/write register that contains the interrupt enable bits and interrupt pending bits for the four timer interrupt sources, designated A, B, C, and D. The condition that causes each type of interrupt depends on the operating mode, as shown in Table 66.

This register is cleared upon reset. The register format is shown below.

7	6	5	4	3	2	1	0
TDIEN	TCIEN	TBIEN	TAIEN	TDPND	TCPND	TBPND	TAPND

TAPND The Timer Interrupt Source A Pending bit indicates that timer interrupt condition A has occurred. For an explanation of interrupt conditions A, B, C, and D, see Table 66. This bit can be set by hardware or by software. To clear this bit, software must use the Timer Interrupt Clear Register (TICLR). Any attempt by software to directly write a 0 to this bit is ignored.
0 – Interrupt source A has not triggered.
1 – Interrupt source A has triggered.

TBPND The Timer Interrupt Source B Pending bit indicates that timer interrupt condition B has occurred. For an explanation of interrupt conditions A, B, C, and D, see Table 66. This bit can be set by hardware or by software. To clear this bit, software must use the Timer Interrupt Clear Register (TICLR). Any attempt by software to directly write a 0 to this bit is ignored.
0 – Interrupt source B has not triggered.
1 – Interrupt source B has triggered.

TCPND The Timer Interrupt Source C Pending bit indicates that timer interrupt condition C has occurred. For an explanation of interrupt conditions A, B, C, and D, see Table 66. This bit can be set by hardware or by software. To clear this bit, software must use the Timer Interrupt Clear Register (TICLR). Any attempt by software to directly write a 0 to this bit is ignored.
0 – Interrupt source C has not triggered.
1 – Interrupt source C has triggered.

TDPND The Timer Interrupt Source D Pending bit indicates that timer interrupt condition D has occurred. For an explanation of interrupt conditions A, B, C, and D, see Table 66. This bit can be set by hardware or by software. To clear this bit, software must use the Timer Interrupt Clear Register (TICLR). Any attempt by software to directly write a 0 to this bit is ignored.
0 – Interrupt source D has not triggered.
1 – Interrupt source D has triggered.

TAIEN The Timer Interrupt A Enable bit controls whether an interrupt is generated on each occurrence of interrupt condition A. For an explanation of interrupt conditions A, B, C, and D, see Table 66.
0 – Condition A interrupts disabled.
1 – Condition A interrupts enabled.

TBIEN The Timer Interrupt B Enable bit controls whether an interrupt is generated on each occurrence of interrupt condition B. For an explanation of interrupt conditions A, B, C, and D, see Table 66.
0 – Condition B interrupts disabled.
1 – Condition B interrupts enabled.

TCIEN The Timer Interrupt C Enable bit controls whether an interrupt is generated on each occurrence of interrupt condition C. For an explanation of interrupt conditions A, B, C, and D, see Table 66.
0 – Condition C interrupts disabled.
1 – Condition C interrupts enabled.

TDIEN The Timer Interrupt D Enable bit controls whether an interrupt is generated on each occurrence of interrupt condition D. For an explanation of interrupt conditions A, B, C, and D, see Table 66.
0 – Condition D interrupts disabled.
1 – Condition D interrupts enabled.

23.5.9 Timer Interrupt Clear Register (TICLR)

The TICLR register is a byte-wide, write-only register that allows software to clear the TAPND, TBPND, TCPND, and TDPND bits in the Timer Interrupt Control (TICTRL) register. Do not modify this register with instructions that access the register as a read-modify-write operand, such as the bit manipulation instructions. The register reads as FFh. The register format is shown below.

7 4	3	2	1	0
Reserved	TDCLR	TCCLR	TBCLR	TACLR

TACLR The Timer Pending A Clear bit is used to clear the Timer Interrupt Source A Pending bit (TAPND) in the Timer Interrupt Control register (TICTL).
0 – Writing a 0 has no effect.
1 – Writing a 1 clears the TAPND bit.

TBCLR The Timer Pending A Clear bit is used to clear the Timer Interrupt Source B Pending bit (TBPND) in the Timer Interrupt Control register (TICTL).
0 – Writing a 0 has no effect.
1 – Writing a 1 clears the TBPND bit.

TCCLR The Timer Pending C Clear bit is used to clear the Timer Interrupt Source C Pending bit (TCPND) in the Timer Interrupt Control register (TICTL).
0 – Writing a 0 has no effect.
1 – Writing a 1 clears the TCPND bit.

TDCLR The Timer Pending D Clear bit is used to clear the Timer Interrupt Source D Pending bit (TDPND) in the Timer Interrupt Control register (TICTL).
0 – Writing a 0 has no effect.
1 – Writing a 1 clears the TDPND bit.

24.0 Versatile Timer Unit (VTU)

The VTU contains four fully independent 16-bit timer subsystems. Each timer subsystem can operate either as dual 8-bit PWM timers, as a single 16-bit PWM timer, or as a 16-bit counter with 2 input capture channels. These timer subsystems offers an 8-bit clock prescaler to accommodate a wide range of system frequencies.

The VTU offers the following features:

- The VTU can be configured to provide:
  - — Eight fully independent 8-bit PWM channels
  - — Four fully independent 16-bit PWM channels
  - — Eight 16-bit input capture channels
- The VTU consists of four timer subsystems, each of which contains:
  - — A 16-bit counter
  - — Two 16-bit capture / compare registers
  - — An 8-bit fully programmable clock prescaler
- Each of the four timer subsystems can operate in the following modes:
  - — Low power mode, i.e. all clocks are stopped
  - — Dual 8-bit PWM mode
  - — 16-bit PWM mode
  - — Dual 16-bit input capture mode
- The VTU controls a total of eight I/O pins, each of which can function as either:
  - — PWM output with programmable output polarity
  - — Capture input with programmable event detection and timer reset
- A flexible interrupt scheme with
  - — Four separate system level interrupt requests
  - — A total of 16 interrupt sources each with a separate interrupt pending bit and interrupt enable bit

24.1 VTU FUNCTIONAL DESCRIPTION

The VTU is comprised of four timer subsystems. Each timer subsystem contains an 8-bit clock prescaler, a 16-bit up-counter, and two 16-bit registers. Each timer subsystem controls two I/O pins which either function as PWM outputs or capture inputs depending on the mode of operation. There are four system-level interrupt requests, one for each timer subsystem. Each system-level interrupt request is controlled by four interrupt pending bits with associated enable/disable bits. All four timer subsystems are fully independent, and each may operate as a dual 8-bit PWM timer, a 16-bit PWM timer, or as a dual 16-bit capture timer. Figure 95 shows the main elements of the VTU.

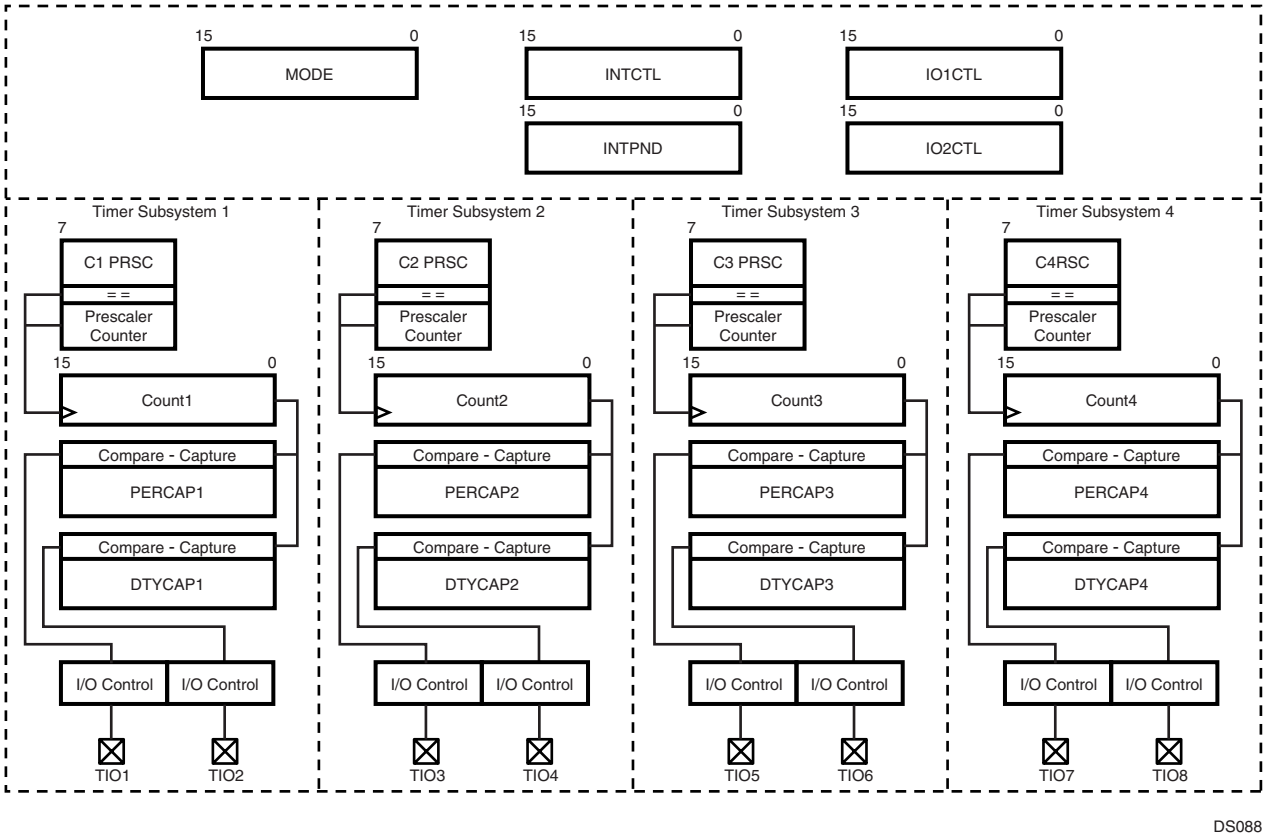

Figure 95. Versatile Timer Unit Block Diagram

24.1.1 Dual 8-bit PWM Mode

Each timer subsystem may be configured to generate two fully independent PWM waveforms on the respective TIOx pins. In this mode, the counter COUNTx is split and operates as two independent 8-bit counters. Each counter increments at the rate determined by the clock prescaler.

Each of the two 8-bit counters may be started and stopped separately using the corresponding TxRUN bits. Once either of the two 8-bit timers is running, the clock prescaler starts counting. Once the clock prescaler counter value matches the value of the associated CxPRSC register field, COUNTx is incremented.

The period of the PWM output waveform is determined by the value of the PERCAPx register. The TIOx output starts at the default value as programmed in the IOxCTL.PxPOL bit. Once the counter value reaches the value of the period register PERCAPx, the counter is cleared on the next counter increment. On the following increment from 00h to 01h, the TIOx output will change to the opposite of the default value.

The duty cycle of the PWM output waveform is controlled by the DTYCAPx register value. Once the counter value reaches the value of the duty cycle register DTYCAPx, the PWM output TIOx changes back to its default value on the next counter increment. Figure 96 illustrates this concept.

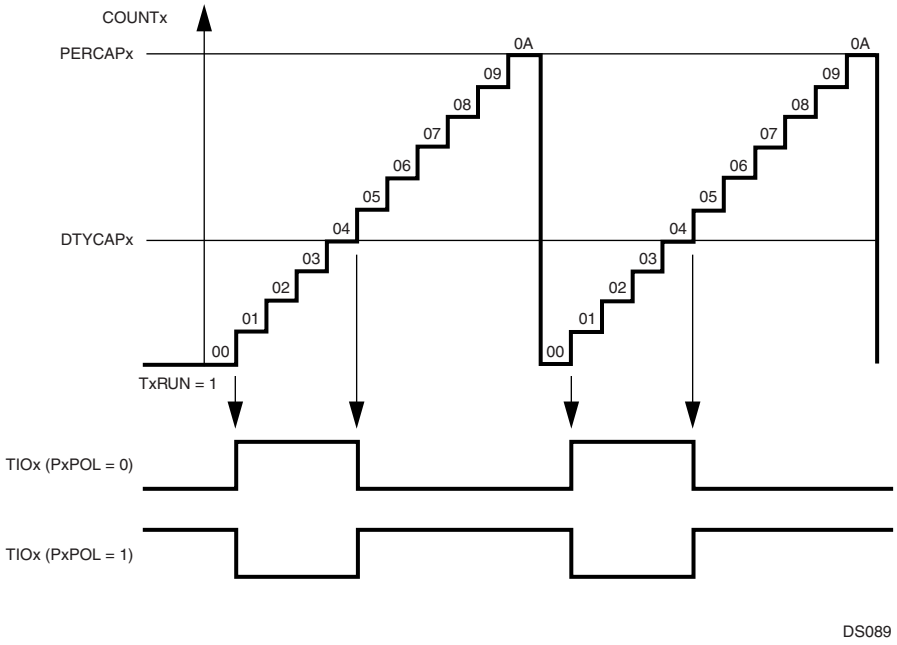

Figure 96. VTU PWM Generation

The period time is determined by the following formula:

$$\text{PWM Period} = (\text{PERCAPx} + 1) \times (\text{CxPRSC} + 1) \times T_{CLK}$$

The duty cycle in percent is calculated as follows:

$$\text{Duty Cycle} = (\text{DTYCAPx} / (\text{PERCAPx} + 1)) \times 100$$

If the duty cycle register (DTYCAPx) holds a value which is greater than the value held in the period register (PERCAPx) the TIOx output will remain at the opposite of its default value which corresponds to a duty cycle of 100%. If the duty cycle register (DTYCAPx) register holds a value of 00h, the TIOx output will remain at the default value which corresponds to a duty cycle of 0%, in which case the value in the PERCAPx register is irrelevant. This scheme allows the duty cycle to be programmed in a range from 0% to 100%.

In order to allow fully synchronized updates of the period and duty cycle compare values, the PERCAPx and DTYCAPx registers are double buffered when operating in PWM mode. Therefore, if software writes to either the period or duty cycle register while either of the two PWM channels is enabled, the new value will not take effect until the counter value matches the previous period value or the timer is stopped.

Reading the PERCAPx or DTYCAPx register will always return the most recent value written to it.

The counter registers can be written if both 8-bit counters are stopped. This allows software to preset the counters before starting, which can be used to generate PWM output waveforms with a phase shift relative to each other. If the counter is written with a value other than 00h, it will start incrementing from that value. The TIOx output will remain at its default value until the first 00h to 01h transition of the counter value occurs. If the counter is preset to values which are less than or equal to the value held in the period register (PERCAPx) the counter will count up until a match between the counter value and the PERCAPx register value occurs. The counter will then be cleared and continue counting up. Alternatively, the counter may be written with a value which is greater than the value held in the period register. In that case the counter will count up to FFh, then roll over to 00h. In any case, the TIOx pin always changes its state at the 00h to 01h transition of the counter.

Software may only write to the COUNTx register if both TxRUN bits of a timer subsystem are clear. Any writes to the counter register while either timer is running will be ignored.

The two I/O pins associated with a timer subsystem function as independent PWM outputs in the dual 8-bit PWM mode. If a PWM timer is stopped using its associated MODE.TxRUN bit the following actions result:

- The associated TIOx pin will return to its default value as defined by the IOxCTL.PxPOL bit.
- The counter will stop and will retain its last value.
- Any pending updates of the PERCAPx and DTYCAPx register will be completed.
- The prescaler counter will be stopped and reset if both MODE.TxRUN bits are cleared.

Figure 97 illustrates the configuration of a timer subsystem while operating in dual 8-bit PWM mode. The numbering in Figure 97 refers to timer subsystem 1 but equally applies to the other three timer subsystems.

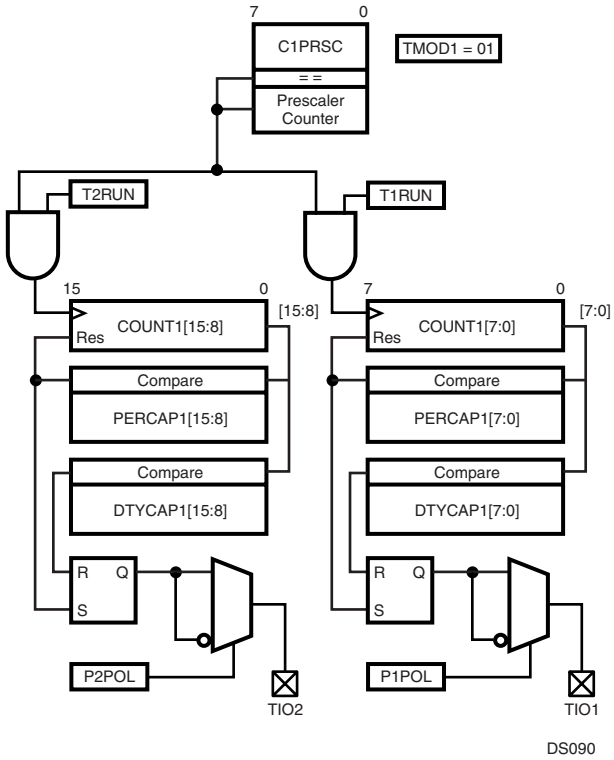

Figure 97. VTU Dual 8-Bit PWM Mode

24.1.2 16-Bit PWM Mode

Each of the four timer subsystems may be independently configured to provide a single 16-bit PWM channel. In this case the lower and upper bytes of the counter are concatenated to form a single 16-bit counter.

Operation in 16-bit PWM mode is conceptually identical to the dual 8-bit PWM operation as outlined under Dual 8-bit PWM Mode on page 172. The 16-bit timer may be started or stopped with the lower MODE.TxRUN bit, i.e. T1RUN for timer subsystem 1.

The two TIOx outputs associated with a timer subsystem can be used to produce either two identical PWM waveforms or two PWM waveforms of opposite polarities. This can be accomplished by setting the two PxPOL bits of the respective timer subsystem to either identical or opposite values.

Figure 98 illustrates the configuration of a timer subsystem while operating in 16-bit PWM mode. The numbering in Figure 98 refers to timer subsystem 1 but equally applies to the other three timer subsystems.

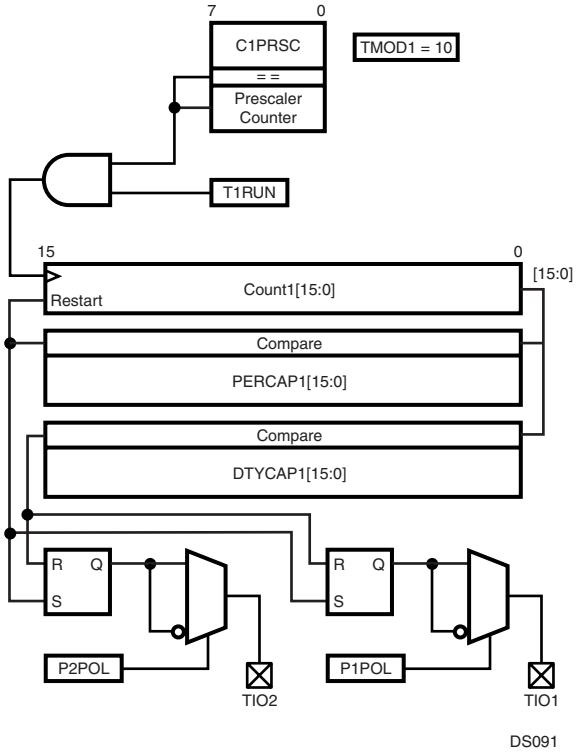

Figure 98. VTU 16-bit PWM Mode

24.1.3 Dual 16-Bit Capture Mode

In addition to the two PWM modes, each timer subsystem may be configured to operate in an input capture mode which provides two 16-bit capture channels. The input capture mode can be used to precisely measure the period and duty cycle of external signals.

In capture mode the counter COUNTx operates as a 16-bit up-counter while the two TIOx pins associated with a timer subsystem operate as capture inputs. A capture event on the TIOx pins causes the contents of the counter register (COUNTx) to be copied to the PERCAPx or DTYCAPx registers respectively.

Starting the counter is identical to the 16-bit PWM mode, i.e. setting the lower of the two MODE.TxRUN bits will start the counter and the clock prescaler. In addition, the capture event inputs are enabled once the MODE.TxRUN bit is set.

The TIOx capture inputs can be independently configured to detect a capture event on either a positive transition, a negative transition or both a positive and a negative transition. In addition, any capture event may be used to reset the counter COUNTx and the clock prescaler counter. This avoids the need for software to keep track of timer overflow conditions and greatly simplifies the direct frequency and duty cycle measurement of an external signal.

Figure 99 illustrates the configuration of a timer subsystem while operating in capture mode. The numbering in Figure 99 refers to timer subsystem 1 but equally applies to the other three timer subsystems.

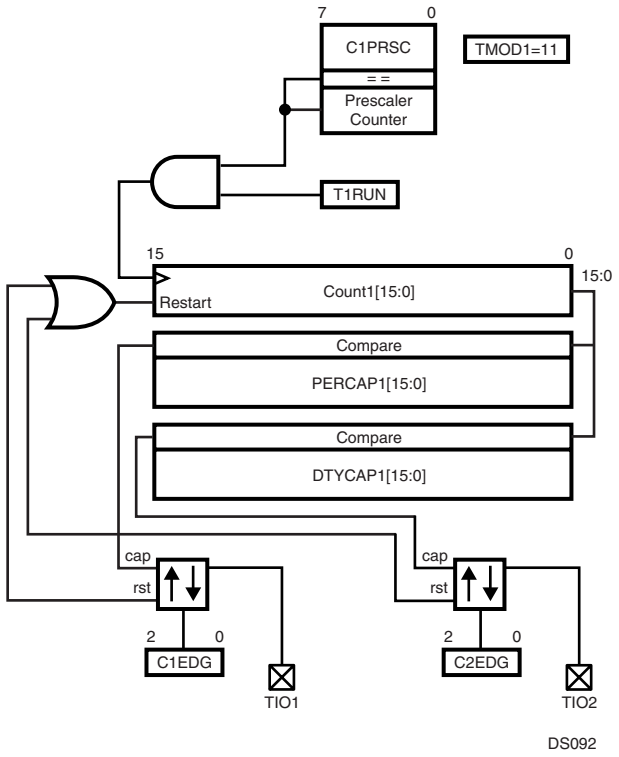

Figure 99. VTU Dual 16-bit Capture Mode

24.1.4 Low Power Mode

In case a timer subsystem is not used, software can place it in a low-power mode. All clocks to a timer subsystem are stopped and the counter and prescaler contents are frozen once low-power mode is entered. Software may continue to write to the MODE, INTCTL, IOxCTL, and CLKxPS registers. Write operations to the INTPND register are allowed; but if a timer subsystem is in low-power mode, its associated interrupt pending bits cannot be cleared. Software cannot write to the COUNTx, PERCAPx, and DTYCAPx registers of a timer subsystem while it is in low-power mode. All registers can be read at any time.

24.1.5 Interrupts

The VTU has a total of 16 interrupt sources, four for each of the four timer subsystems. All interrupt sources have a pending bit and an enable bit associated with them. All interrupt pending bits are denoted IxAPD through IxDPD where “x” relates to the specific timer subsystem. There is one system level interrupt request for each of the four timer subsystems.

Figure 100 illustrates the interrupt structure of the versatile timer module.

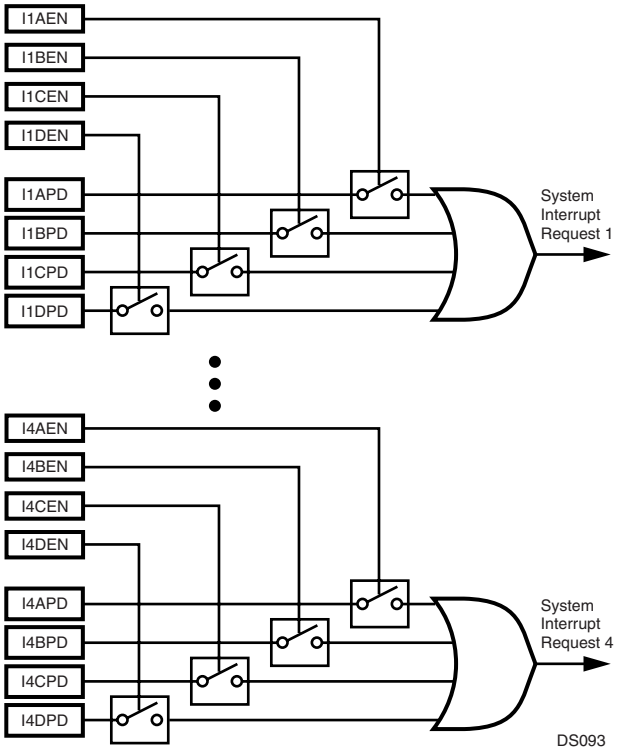

Figure 100. VTU Interrupt Request Structure

Each of the timer pending bits - IxAPD through IxDPD - is set by a specific hardware event depending on the mode of operation, i.e., PWM or Capture mode. Table 69 outlines the specific hardware events relative to the operation mode which cause an interrupt pending bit to be set.

Table 69 VTU Interrupt Sources

Pending Flag	Dual 8-bit PWM Mode	16-bit PWM Mode	Capture Mode
IxAPD	Low Byte Duty Cycle match	Duty Cycle match	Capture to PERCAPx
IxBPD	Low Byte Period match	Period match	Capture to DTYCAPx
IxCPD	High Byte Duty Cycle match	N/A	Counter Overflow
IxDPD	High Byte Period match	N/A	N/A

24.1.6 ISE Mode operation

The VTU supports breakpoint operation of the In-System-Emulator (ISE). If FREEZE is asserted, all timer counter clocks will be inhibited and the current value of the timer registers will be frozen; in capture mode, all further capture events are disabled. Once FREEZE becomes inactive, counting will resume from the previous value and the capture input events are re-enabled.

24.2 VTU REGISTERS

The VTU contains a total of 19 user accessible registers, as listed in Table 70. All registers are word-wide and are initialized to a known value upon reset. All software accesses to the VTU registers must be word accesses.

Table 70 VTU Registers

Name	Address	Description
MODE	FF FF80h	Mode Control Register
IO1CTL	FF FF82h	I/O Control Register 1
IO2CTL	FF FF84h	I/O Control Register 2
INTCTL	FF FF86h	Interrupt Control Register
INTPND	FF FF88h	Interrupt Pending Register
CLK1PS	FF FF8Ah	Clock Prescaler Register 1
CLK2PS	FF FF98h	Clock Prescaler Register 2
COUNT1	FF FF8Ch	Counter 1 Register
PERCAP1	FF FF8Eh	Period/Capture 1 Register
DTYCAP1	FF FF90h	Duty Cycle/Capture 1 Register
COUNT2	FF FF92h	Counter 2 Register
PERCAP2	FF FF94h	Period/Capture 2 Register
DTYCAP2	FF FF96h	Duty Cycle/Capture 2 Register
COUNT3	FF FF9Ah	Counter 3 Register
PERCAP3	FF FF9Ch	Period/Capture 3 Register
DTYCAP3	FF FF9Eh	Duty Cycle/Capture 3 Register
COUNT4	FF FFA0h	Counter 4 Register
PERCAP4	FF FFA2h	Period/Capture 4 Register
DTYCAP4	FF FFA4h	Duty Cycle/Capture 4 Register

24.2.1 Mode Control Register (MODE)

The MODE register is a word-wide read/write register which controls the mode selection of all four timer subsystems. The register is clear after reset.

7	6	5	4	3	2	1	0
TMOD2		T4RUN	T3RUN	TMOD1		T2RUN	T1RUN

15	14	13	12	11	10	9	8
TMOD4		T8RUN	T7RUN	TMOD3		T6RUN	T5RUN

TxRUN The Timer Run bit controls whether the corresponding timer is stopped or running. If set, the associated counter and clock prescaler is started depending on the mode of operation. Once set, the clock to the clock prescaler and the counter are enabled and the counter will increment each time the clock prescaler counter value matches the value defined in the associated clock prescaler field (CxPRSC).

0 – Timer stopped.

1 – Timer running.

TMODx The Timer System Operating Mode field enables or disables the Timer Subsystem and defines its operating mode.

00 – *Low-Power Mode.* All clocks to the counter subsystem are stopped. The counter is stopped regardless of the value of the TxRUN bits. Read operations to the Timer Subsystem will return the last value; software must not perform any write operations to the Timer Subsystem while it is disabled since those will be ignored.

01 – *Dual 8-bit PWM mode.* Each 8-bit counter may individually be started or stopped via its associated TxRUN bit. The TIOx pins will function as PWM outputs.

10 – *16-bit PWM mode.* The two 8-bit counters are concatenated to form a single 16-bit counter. The counter may be started or stopped with the lower of the two TxRUN bits, i.e. T1RUN, T3RUN, T5RUN, and T7RUN. The TIOx pins will function as PWM outputs.

11 – *Capture Mode.* Both 8-bit counters are concatenated and operate as a single 16-bit counter. The counter may be started or stopped with the lower of the two TxRUN bits, i.e., T1RUN, T3RUN, T5RUN, and T7RUN. The TIOx pins will function as capture inputs.

24.2.2 I/O Control Register 1 (IO1CTL)

The I/O Control Register 1 (IO1CTL) is a word-wide read/write register. The register controls the function of the I/O pins TIO1 through TIO4 depending on the selected mode of operation. The register is clear after reset.

7	6 4	3	2 0
P2POL	C2EDG	P1POL	C1EDG

15	14 12	11	10 8
P4POL	C4EDG	P3POL	C3EDG

CxEDG — The Capture Edge Control field specifies the polarity of a capture event and the reset of the counter. The value of this three bit field has no effect while operating in PWM mode.

CxEDG	Capture	Counter Reset
000	Rising edge	No
001	Falling edge	No
010	Rising edge	Yes
011	Falling edge	Yes
100	Both edges	No
101	Both edges	Rising edge
110	Both edges	Falling edge
111	Both edges	Both edges

PxPOL — The PWM Polarity bit selects the output polarity. While operating in PWM mode the bit specifies the polarity of the corresponding PWM output (TIOx). Once a counter is stopped, the output will assume the value of PxPOL, i.e., its initial value. The PxPOL bit has no effect while operating in capture mode.

0 – The PWM output goes high at the 00h to 01h transition of the counter and will go low once the counter value matches the duty cycle value.

1 – The PWM output goes low at the 00h to 01h transition of the counter and will go high once the counter value matches the duty cycle value.

24.2.3 I/O Control Register 2 (IO2CTL)

The IO2CTL register is a word-wide read/write register. The register controls the functionality of the I/O pins TIO5 through TIO8 depending on the selected mode of operation. The register is cleared at reset.

7	6 4	3	2 0
P6POL	C6EDG	P5POL	C5EDG

15	14 12	11	10 8
P8POL	C8EDG	P7POL	C7EDG

The functionality of the bit fields of the IO2CTL register is identical to the ones described in the IO1CTL register section.

24.2.4 Interrupt Control Register (INTCTL)

The INTCTL register is a word-wide read/write register. It contains the interrupt enable bits for all 16 interrupt sources of the VTU. Each interrupt enable bit corresponds to an interrupt pending bit located in the Interrupt Pending Register (INTPND). All INTCTL register bits are solely under software control. The register is clear after reset.

7	6	5	4	3	2	1	0
I2DEN	I2CEN	I2BEN	I2AEN	I1DEN	I1CEN	I1BEN	I1AEN

15	14	13	12	11	10	9	8
I4DEN	I4CEN	I4BEN	I4AEN	I3DEN	I3CEN	I3BEN	I3AEN

IxAEN — The Timer x Interrupt A Enable bit controls interrupt requests triggered on the corresponding IxAPD bit being set. The associated IxAPD bit will be updated regardless of the value of the IxAEN bit.

0 – Disable system interrupt request for the IxAPD pending bit.

1 – Enable system interrupt request for the IxAPD pending bit.

IxBEN — The Timer x Interrupt B Enable bit controls interrupt requests triggered on the corresponding IxBPD bit being set. The associated IxBPD bit will be updated regardless of the value of the IxBEN bit.

0 – Disable system interrupt request for the IxBPD pending bit.

1 – Enable system interrupt request for the IxBPD pending bit.

IxCEN — The Timer x Interrupt C Enable bit controls interrupt requests triggered on the corresponding IxCPD bit being set. The associated IxCPD bit will be updated regardless of the value of the IxCEN bit.
- 0 – Disable system interrupt request for the IxCPD pending bit.
- 1 – Enable system interrupt request for the IxCPD pending bit.

IxDEN — Timer x Interrupt D Enable bit controls interrupt requests triggered on the corresponding IxDPD bit being set. The associated IxDPD bit will be updated regardless of the value of the IxDEN bit.
- 0 – Disable system interrupt request for the IxDPD pending bit.
- 1 – Enable system interrupt request for the IxDPD pending bit.

24.2.5 Interrupt Pending Register (INTPND)

The INTPND register is a word-wide read/write register which contains all 16 interrupt pending bits. There are four interrupt pending bits called IxAPD through IxDPD for each timer subsystem. Each interrupt pending bit is set by a hardware event and can be cleared if software writes a 1 to the bit position. The value will remain unchanged if a 0 is written to the bit position. All interrupt pending bits are cleared (0) upon reset.

7	6	5	4	3	2	1	0
I2DPD	I2CPD	I2BPD	I2APD	I1DPD	I1CPD	I1BPD	I1APD

15	14	13	12	11	10	9	8
I4DPD	I4CPD	I4BPD	I4APD	I3DPD	I3CPD	I3BPD	I3APD

IxAPD — The Timer x Interrupt A Pending bit indicates that an interrupt condition for the related timer subsystem has occurred. Table 69 on page 174 lists the hardware condition which causes this bit to be set.
- 0 – No interrupt pending.
- 1 – Timer interrupt condition occurred.

IxBPD — The Timer x Interrupt B Pending bit indicates that an interrupt condition for the related timer subsystem has occurred. Table 69 on page 174 lists the hardware condition which causes this bit to be set.
- 0 – No interrupt pending.
- 1 – Timer interrupt condition occurred.

IxCPD — The Timer x Interrupt C Pending bit indicates that an interrupt condition for the related timer subsystem has occurred. Table 69 on page 174 lists the hardware condition which causes this bit to be set.
- 0 – No interrupt pending.
- 1 – Timer interrupt condition occurred.

IxDPD — The Timer x Interrupt D Pending bit indicates that an interrupt condition for the related timer subsystem has occurred. Table 69 on page 174 lists the hardware condition which causes this bit to be set.
- 0 – No interrupt pending.
- 1 – Timer interrupt condition occurred.

24.2.6 Clock Prescaler Register 1 (CLK1PS)

The CLK1PS register is a word-wide read/write register. The register is split into two 8-bit fields called C1PRSC and C2PRSC. Each field holds the 8-bit clock prescaler compare value for timer subsystems 1 and 2 respectively. The register is cleared at reset.

15 – 8	7 – 0
C2PRSC	C1PRSC

C1PRSC — The Clock Prescaler 1 Compare Value field holds the 8-bit prescaler value for timer subsystem 1. The counter of timer subsystem is incremented each time when the clock prescaler compare value matches the value of the clock prescaler counter. The division ratio is equal to (C1PRSC + 1). For example, 00h is a ratio of 1, and FFh is a ratio of 256.

C2PRSC — The Clock Prescaler 2 Compare Value field holds the 8-bit prescaler value for timer subsystem 2. The counter of timer subsystem is incremented each time when the clock prescaler compare value matches the value of the clock prescaler counter. The division ratio is equal to (C2PRSC + 1).

24.2.7 Clock Prescaler Register 2 (CLK2PS)

The Clock Prescaler Register 2 (CLK2PS) is a word-wide read/write register. The register is split into two 8-bit fields called C3PRSC and C4PRSC. Each field holds the 8-bit clock prescaler compare value for timer subsystems 3 and 4 respectively. The register is cleared at reset.

15 – 8	7 – 0
C4PRSC	C3PRSC

C3PRSC — The Clock Prescaler 3 Compare Value field holds the 8-bit prescaler value for timer subsystem 3. The counter of timer subsystem is incremented each time when the clock prescaler compare value matches the value of the clock prescaler counter. The division ratio is equal to (C3PRSC + 1).

C4PRSC — The Clock Prescaler 4 Compare Value field holds the 8-bit prescaler value for timer subsystem 4. The counter of timer subsystem is incremented each time when the clock prescaler compare value matches the value of the clock prescaler counter. The division ratio is equal to (C4PRSC + 1).

24.2.8 Counter Register n (COUNTx)

The Counter (COUNTx) registers are word-wide read/write registers. There are a total of four registers called COUNT1 through COUNT4, one for each of the four timer subsystems. Software may read the registers at any time. Reading the register will return the current value of the counter. The register may only be written if the counter is stopped (i.e. if both TxRUN bits associated with a timer subsystem are clear). The registers are cleared at reset.

15	0
CNTx	

24.2.9 Period/Capture Register n (PERCAPx)

The PERCAPx registers are word-wide read/write registers. There are a total of four registers called PERCAP1 through PERCAP4, one for each timer subsystem. The registers hold the period compare value in PWM mode of the counter value at the time the last associated capture event occurred. In PWM mode the register is double buffered. If a new period compare value is written while the counter is running, the write will not take effect until counter value matches the previous period compare value or until the counter is stopped. Reading may take place at any time and will return the most recent value which was written. The PERCAPx registers are cleared at reset.

15	0
PCAPx	

24.2.10 Duty Cycle/Capture Register n (DTYCAPx)

The Duty Cycle/Capture (DTYCAPx) registers are word-wide read/write registers. There are a total of four registers called DTYCAP1 through DTYCAP4, one for each timer subsystem. The registers hold the period compare value in PWM mode or the counter value at the time the last associated capture event occurred. In PWM mode, the register is double buffered. If a new duty cycle compare value is written while the counter is running, the write will not take effect until the counter value matches the previous period compare value or until the counter is stopped. The update takes effect on period boundaries only. Reading may take place at any time and will return the most recent value which was written. The DTYCAPx registers are cleared at reset.

15	0
DCAPx	

25.0 Register Map

Table 71 is a detailed memory map showing the specific memory address of the memory, I/O ports, and registers. The table shows the starting address, the size, and a brief description of each memory block and register. For detailed information on using these memory locations, see the applicable sections in the data sheet.

All addresses not listed in the table are reserved and must not be read or written. An attempt to access an unlisted address will have unpredictable results.

Each byte-wide register occupies a single address and can be accessed only in a byte-wide transaction. Each word-wide register occupies two consecutive memory addresses and can be accessed only in a word-wide transaction. Both the byte-wide and word-wide registers reside at word boundaries (even addresses). Therefore, each byte-wide register uses only the lowest eight bits of the internal data bus.

Most device registers are read/write registers. However, some registers are read-only or write-only, as indicated in the table. An attempt to read a write-only register or to write a read-only register will have unpredictable results.

When software writes to a register in which one or more bits are reserved, it must write a zero to each reserved bit unless indicated otherwise in the description of the register. Reading a reserved bit returns an undefined value.

Table 71 Detailed Device Mapping

Register Name	Size	Address	Access Type	Value After Reset	Comments
Bluetooth LLC Registers					
PLN	Byte	0E F180h	Write-Only		
WHITENING_CHANNEL_SELECTION	Byte	0E F181h	Write-Only		
SINGLE_FREQUENCY_SELECTION	Byte	0E F182h	Write-Only		
LN_BT_CLOCK_0	Byte	0E F198h	Read-Only		
LN_BT_CLOCK_1	Byte	0E F199h	Read-Only		
LN_BT_CLOCK_2	Byte	0E F19Ah	Read-Only		
LN_BT_CLOCK_3	Byte	0E F19Bh	Read-Only		
RX_CN	Byte	0E F19Ch	Read-Only		
TX_CN	Byte	0E F19Dh	Read-Only		
AC_ACCEPTLVL	Word	0E F19Eh	Write-Only		
LAP_ACCEPTLVL	Byte	0E F1A0h	Write-Only		
RFSYNCH_DELAY	Byte	0E F1A1h	Write-Only		
SPI_READ	Word	0E F1A2h	Read-Only		
SPI_MODE_CONFIG	Byte	0E F1A4h	Write-Only		
M_COUNTER_0	Byte	0E F1A6h	Read/Write		
M_COUNTER_1	Byte	0E F1A7h	Read/Write		
M_COUNTER_2	Byte	0E F1A8h	Read/Write		
N_COUNTER_0	Byte	0E F1AAh	Write-Only		
N_COUNTER_1	Byte	0E F1ABh	Write-Only		
BT_CLOCK_WR_0	Byte	0E F1ACh	Write-Only		
BT_CLOCK_WR_1	Byte	0E F1ADh	Write-Only		
BT_CLOCK_WR_2	Byte	0E F1AEh	Write-Only		
BT_CLOCK_WR_3	Byte	0E F1AFh	Write-Only		

Register Name	Size	Address	Access Type	Value After Reset	Comments
WTPTC_1SLOT	Word	0E F1B0h	Write-Only		
WTPTC_3SLOT	Word	0E F1B2h	Write-Only		
WTPTC_5SLOT	Word	0E F1B4h	Write-Only		
SEQ_RESET	Byte	0E F1B6h	Write-Only		
SEQ_CONTINUE	Byte	0E F1B7h	Write-Only		
RX_STATUS	Byte	0E F1B8h	Read-Only		
CHIP_ID	Byte	0E F1BAh	Read-Only		
INT_VECTOR	Byte	0E F1BCh	Read-Only		
SYSTEM_CLK_EN	Byte	0E F1BEh	Write-Only		
LINKTIMER_WR_RD	Word	0E F1C0h	Read-Only		
LINKTIMER_SELECT	Byte	0E F1C2h	Read-Only		
LINKTIMER_STATUS_EXP_FLAG	Byte	0E F1C4h	Read-Only		
LINKTIMER_STATUS_RD_WR_FLAG	Byte	0E F1C5h	Read-Only		
LINKTIMER_ADJUST_PLUS	Byte	0E F1C6h	Read-Only		
LINKTIMER_ADJUST_MINUS	Byte	0E F1C7h	Read-Only		
SLOTTIMER_WR_RD	Byte	0E F1C8h	Read-Only		
CAN Module Message Buffers					
CMB0_CNSTAT	Word	0E F000h	Read/Write	XXXXh	
CMB0_TSTP	Word	0E F002h	Read/Write	XXXXh	
CMB0_DATA3	Word	0E F004h	Read/Write	XXXXh	
CMB0_DATA2	Word	0E F006h	Read/Write	XXXXh	
CMB0_DATA1	Word	0E F008h	Read/Write	XXXXh	
CMB0_DATA0	Word	0E F00Ah	Read/Write	XXXXh	
CMB0_ID0	Word	0E F00Ch	Read/Write	XXXXh	
CMB0_ID1	Word	0E F00Eh	Read/Write	XXXXh	
CMB1	8-word	0E F010h–0E F01Fh	Read/Write	XXXXh	Same register layout as CMB0.
CMB2	8-word	0E F020h–0E F02Fh	Read/Write	XXXXh	Same register layout as CMB0.
CMB3	8-word	0E F030h–0E F03Fh	Read/Write	XXXXh	Same register layout as CMB0.
CMB4	8-word	0E F040h–0E F04Fh	Read/Write	XXXXh	Same register layout as CMB0.
CMB5	8-word	0E F050h–0E F05Fh	Read/Write	XXXXh	Same register layout as CMB0.
CMB6	8-word	0E F060h–0E F06Fh	Read/Write	XXXXh	Same register layout as CMB0.

Register Name	Size	Address	Access Type	Value After Reset	Comments
CMB7	8-word	0E F070h–0E F07Fh	Read/Write	XXXXh	Same register layout as CMB0.
CMB8	8-word	0E F080h–0E F08Fh	Read/Write	XXXXh	Same register layout as CMB0.
CMB9	8-word	0E F090h–0E F09Fh	Read/Write	XXXXh	Same register layout as CMB0.
CMB10	8-word	0E F0A0h–0E F0AFh	Read/Write	XXXXh	Same register layout as CMB0.
CMB11	8-word	0E F0B0h–0E F0BFh	Read/Write	XXXXh	Same register layout as CMB0.
CMB12	8-word	0E F0C0h–0E F0CFh	Read/Write	XXXXh	Same register layout as CMB0.
CMB13	8-word	0E F0D0h–0E F0DFh	Read/Write	XXXXh	Same register layout as CMB0.
CMB14	8-word	0E F0E0h–0E F0EFh	Read/Write	XXXXh	Same register layout as CMB0.
CAN Registers					
CGCR	Word	0E F100h	Read/Write	0000h	
CTIM	Word	0E F102h	Read/Write	0000h	
GMSKX	Word	0E F104h	Read/Write	0000h	
GMSKB	Word	0E F106h	Read/Write	0000h	
BMSKX	Word	0E F108h	Read/Write	0000h	
BMSKB	Word	0E F10Ah	Read/Write	0000h	
CIEN	Word	0E F10Ch	Read/Write	0000h	
CIPND	Word	0E F10Eh	Read Only	0000h	
CICLR	Word	0E F110h	Write Only	0000h	
CICEN	Word	0E F112h	Read/Write	0000h	
CSTPND	Word	0E F114h	Read Only	0000h	
CANEC	Word	0E F116h	Read Only	0000h	
CEDIAG	Word	0E F118h	Read Only	0000h	
CTMR	Word	0E F11Ah	Read Only	0000h	
DMA Controller					
ADCA0	Double Word	FF F800h	Read/Write	0000 0000h	
ADRA0	Double Word	FF F804h	Read/Write	0000 0000h	
ADCB0	Double Word	FF F808h	Read/Write	0000 0000h	

Register Name	Size	Address	Access Type	Value After Reset	Comments
ADRB0	Double Word	FF F80Ch	Read/Write	0000 0000h	
BLTC0	Word	FF F810h	Read/Write	0000h	
BLTR0	Word	FF F814h	Read/Write	0000h	
DMACNTL0	Word	FF F81Ch	Read/Write	0000h	
DMASTAT0	Byte	FF F81Eh	Read/Write	00h	
ADCA1	Double Word	FF F820h	Read/Write	0000 0000h	
ADRA1	Double Word	FF F824h	Read/Write	0000 0000h	
ADCB1	Double Word	FF F828h	Read/Write	0000 0000h	
ADRB1	Double Word	FF F82Ch	Read/Write	0000 0000h	
BLTC1	Word	FF F830h	Read/Write	0000h	
BLTR1	Word	FF F834h	Read/Write	0000h	
DMACNTL1	Word	FF F83Ch	Read/Write	0000h	
DMASTAT1	Byte	FF F83Eh	Read/Write	00h	
ADCA2	Double Word	FF F840h	Read/Write	0000 0000h	
ADRA2	Double Word	FF F844h	Read/Write	0000 0000h	
ADCB2	Double Word	FF F848h	Read/Write	0000 0000h	
ADRB2	Double Word	FF F84Ch	Read/Write	0000 0000h	
BLTC2	Word	FF F850h	Read/Write	0000h	
BLTR2	Word	FF F854h	Read/Write	0000h	
DMACNTL2	Word	FF F85Ch	Read/Write	0000h	
DMASTAT2	Byte	FF F85Eh	Read/Write	00h	
ADCA3	Double Word	FF F860h	Read/Write	0000 0000h	
ADRA3	Double Word	FF F864h	Read/Write	0000 0000h	
ADCB3	Double Word	FF F868h	Read/Write	0000 0000h	
ADRB3	Double Word	FF F86Ch	Read/Write	0000 0000h	
BLTC3	Word	FF F870h	Read/Write	0000h	
BLTR3	Word	FF F874h	Read/Write	0000h	
DMACNTL3	Word	FF F87Ch	Read/Write	0000h	

Register Name	Size	Address	Access Type	Value After Reset	Comments
DMASTAT3	Byte	FF F87Eh	Read/Write	00h	
Bus Interface Unit					
BCFG	Byte	FF F900h	Read/Write	07h	
IOCFG	Word	FF F902h	Read/Write	069Fh	
SZCFG0	Word	FF F904h	Read/Write	069Fh	
SZCFG1	Word	FF F906h	Read/Write	069Fh	
SZCFG2	Word	FF F908h	Read/Write	069Fh	
System Configuration					
MCFG	Byte	FF F910h	Read/Write	00h	
DBGCFG	Byte	FF F912h	Read/Write	00h	
MSTAT	Byte	FF F914h	Read Only	ENV2:0 pins	
Flash Program Memory Interface					
FMIBAR	Word	FF F940h	Read/Write	0000h	
FMIBDR	Word	FF F942h	Read/Write	0000h	
FM0WER	Word	FF F944h	Read/Write	0000h	
FM1WER	Word	FF F946h	Read/Write	0000h	
FMCTRL	Word	FF F94Ch	Read/Write	0000h	
FMSTAT	Word	FF F94Eh	Read/Write	0000h	
FMPSR	Byte	FF F950h	Read/Write	04h	
FMSTART	Byte	FF F952h	Read/Write	18h	
FMTRAN	Byte	FF F954h	Read/Write	30h	
FMPROG	Byte	FF F956h	Read/Write	16h	
FMPERASE	Byte	FF F958h	Read/Write	04h	
FMMERASE0	Byte	FF F95Ah	Read/Write	EAh	
FMEND	Byte	FF F95Eh	Read/Write	18h	
FMMEND	Byte	FF F960h	Read/Write	3Ch	
FMRCV	Byte	FF F962h	Read/Write	04h	
FMAR0	Word	FF F964h	Read Only		
FMAR1	Word	FF F966h	Read Only		
FMAR2	Word	FF F968h	Read Only		

Register Name	Size	Address	Access Type	Value After Reset	Comments
Flash Data Memory Interface					
FSMIBAR	Word	FF F740h	Read/Write	0000h	
FSMIBDR	Word	FF F742h	Read/Write	0000h	
FSM0WER	Word	FF F744h	Read/Write	0000h	
FSMCTRL	Word	FF F74Ch	Read/Write	0000h	
FSMSTAT	Word	FF F74Eh	Read/Write	0000h	
FSMPSR	Byte	FF F750h	Read/Write	04h	
FSMSTART	Byte	FF F752h	Read/Write	18h	
FSMTRAN	Byte	FF F754h	Read/Write	30h	
FSMPROG	Byte	FF F756h	Read/Write	16h	
FSMPERASE	Byte	FF F758h	Read/Write	04h	
FSMMERASE0	Byte	FF F75Ah	Read/Write	EAh	
FSMEND	Byte	FF F75Eh	Read/Write	18h	
FSMMEND	Byte	FF F760h	Read/Write	3Ch	
FSMRCV	Byte	FF F762h	Read/Write	04h	
FSMAR0	Word	FF F764h	Read Only		
FSMAR1	Word	FF F766h	Read Only		
FSMAR2	Word	FF F768h	Read Only		
CVSD/PCM Converter					
CVSDIN	Word	FF FC20h	Write Only	0000h	
CVSDOUT	Word	FF FC22h	Read Only	0000h	
PCMIN	Word	FF FC24h	Write Only	0000h	
PCMOUT	Word	FF FC26h	Read Only	0000h	
LOGIN	Byte	FF FC28h	Write Only	0000h	
LOGOUT	Byte	FF FC2Ah	Read Only	0000h	
LINEARIN	Word	FF FC2Ch	Write Only	0000h	
LINEAROUT	Word	FF FC2Eh	Read Only	0000h	
CVCTRL	Word	FF FC30h	Read/Write	0000h	
CVSTAT	Word	FF FC32h	Read Only	0000h	
CVTEST	Word	FF FC34h	Read/Write	0000h	
CVRADD	Word	FF FC36h	Read/Write	0000h	
CVRDAT	Word	FF FC38h	Read/Write	0000h	
CVDECOUT	Word	FF FC3Ah	Read Only	0000h	

Register Name	Size	Address	Access Type	Value After Reset	Comments
CVENCIN	Word	FF FC3Ch	Read Only	0000h	
CVENCPR	Word	FF FC3Eh	Read Only	0000h	
Triple Clock + Reset					
CRCTRL	Byte	FF FC40h	Read/Write	00X0 0110b	
PRSFC	Byte	FF FC42h	Read/Write	4Fh	
PRSSC	Byte	FF FC44h	Read/Write	B6h	
PRSAC	Byte	FF FC46h	Read/Write	FFh	
Power Management					
PMMCR	Byte	FF FC60h	Read/Write	00h	
PMMSR	Byte	FF FC62h	Read/Write	0000 0XXXb	
Multi-Input Wake-Up					
WKEDG	Word	FF FC80h	Read/Write	00h	
WKENA	Word	FF FC82h	Read/Write	00h	
WKICTL1	Word	FF FC84h	Read/Write	00h	
WKICTL2	Word	FF FC86h	Read/Write	00h	
WKPND	Word	FF FC88h	Read/Write	00h	Bits may only be set; writing 0 has no effect.
WKPCL	Word	FF FC8Ah	Write Only	XXh	
WKIENA	Word	FF FC8Ch	Read/Write	00h	
General-Purpose I/O ports					
PBALT	Byte	FF FB00h	Read/Write	00h	
PBDIR	Byte	FF FB02h	Read/Write	00h	
PBDIN	Byte	FF FB04h	Read Only	XXh	
PBDOUT	Byte	FF FB06h	Read/Write	XXh	
PBWPU	Byte	FF FB08h	Read/Write	00h	
PBHDRV	Byte	FF FB0Ah	Read/Write	00h	
PBALTS	Byte	FF FB0Ch	Read/Write	00h	
PCALT	Byte	FF FB10h	Read/Write	00h	
PCDIR	Byte	FF FB12h	Read Only	00h	
PCDIN	Byte	FF FB14h	Read/Write	XXh	
PCDOUT	Byte	FF FB16h	Read/Write	XXh	

Register Name	Size	Address	Access Type	Value After Reset	Comments
PCWPU	Byte	FF FB18h	Read/Write	00h	
PCHDRV	Byte	FF FB1Ah	Read/Write	00h	
PCALTS	Byte	FF FB1Ch	Read/Write	00h	
I/O ports with Alternate Functions					
PGALT	Byte	FF FCA0h	Read/Write	00h	
PGDIR	Byte	FF FCA2h	Read/Write	00h	
PGDIN	Byte	FF FCA4h	Read Only	XXh	
PGDOUT	Byte	FF FCA6h	Read/Write	XXh	
PGWPU	Byte	FF FCA8h	Read/Write	00h	
PGHDRV	Byte	FF FCAAh	Read/Write	00h	
PGALTS	Byte	FF FCACh	Read/Write	00h	
PHALT	Byte	FF FCC0h	Read/Write	00h	
PHDIR	Byte	FF FCC2h	Read/Write	00h	
PHDIN	Byte	FF FCC4h	Read Only	XXh	
PHDOUT	Byte	FF FCC6h	Read/Write	XXh	
PHWPU	Byte	FF FCC8h	Read/Write	00h	
PHHDRV	Byte	FF FCCAh	Read/Write	00h	
PHALTS	Byte	FF FCCCh	Read/Write	00h	
PIALT	Byte	FF FEE0h	Read/Write	00h	
PIDIR	Byte	FF FEE2h	Read/Write	00h	
PIDIN	Byte	FF FEE4h	Read Only	XXh	
PIDOUT	Byte	FF FEE6h	Read/Write	XXh	
PIWPU	Byte	FF FEE8h	Read/Write	00h	
PIHDRV	Byte	FF FEEAh	Read/Write	00h	
PIALTS	Byte	FF FEECh	Read/Write	00h	
Advanced Audio Interface					
ARFR	Word	FF FD40h	Read Only	0000h	
ARDR0	Word	FF FD42h	Read Only	0000h	
ARDR1	Word	FF FD44h	Read Only	0000h	
ARDR2	Word	FF FD46h	Read Only	0000h	
ARDR3	Word	FF FD48h	Read Only	0000h	
ATFR	Word	FF FD4Ah	Write Only	XXXXh	
ATDR0	Word	FF FD4Ch	Write Only	0000h	

Register Name	Size	Address	Access Type	Value After Reset	Comments
ATDR1	Word	FF FD4Eh	Write Only	0000h	
ATDR2	Word	FF FD50h	Write Only	0000h	
ATDR3	Word	FF FD52h	Write Only	0000h	
AGCR	Word	FF FD54h	Read/Write	0000h	
AISCR	Word	FF FD56h	Read/Write	0000h	
ARSCR	Word	FF FD58h	Read/Write	0004h	
ATSCR	Word	FF FD5Ah	Read/Write	F003h	
ACCR	Word	FF FD5Ch	Read/Write	0000h	
ADMACR	Word	FF FD5Eh	Read/Write	0000h	
Interrupt Control Unit					
IVCT	Byte	FF FE00h	Read Only	10h	Fixed Addr.
NMISTAT	Byte	FF FE02h	Read Only	00h	
EXNMI	Byte	FF FE04h	Read/Write	XXXX 00X0b	
ISTAT0	Word	FF FE0Ah	Read Only	0000h	
ISTAT1	Word	FF FE0Ch	Read Only	0000h	
IENAM0	Word	FF FE0Eh	Read/Write	0000h	
IENAM1	Word	FF FE10h	Read/Write	0000h	
UART					
UTBUF	Byte	FF FE40h	Read/Write	XXh	
URBUF	Byte	FF FE42h	Read Only	XXh	
UICTRL	Byte	FF FE44h	Read/Write	01h	Bits 0:1 read only
USTAT	Byte	FF FE46h	Read only	00h	
UFRS	Byte	FF FE48h	Read/Write	00h	
UMDSL1	Byte	FF FE4Ah	Read/Write	00h	
UBAUD	Byte	FF FE4Ch	Read/Write	00h	
UPSR	Byte	FF FE4Eh	Read/Write	00h	
UOVR	Byte	FF FE50h	Read/Write	00h	
UMDSL2	Byte	FF FE52h	Read/Write	00h	
USPOS	Byte	FF FE54h	Read/Write	06h	
Microwire/SPI interface					
MWDAT	Word	FF FE60h	Read/Write	XXXXh	
MWCTL1	Word	FF FE62h	Read/Write	0000h	

Register Name	Size	Address	Access Type	Value After Reset	Comments
MWSTAT	Word	FF FE64h	Read Only	All imple-mented bits are 0	
ACCESS.bus					
ACBSDA	Byte	FF FEC0h	Read/Write	XXh	
ACBST	Byte	FF FEC2h	Read/Write	00h	
ACBCST	Byte	FF FEC4h	Read/Write	00h	
ACBCTL1	Byte	FF FEC6h	Read/Write	00h	
ACBADDR	Byte	FF FEC8h	Read/Write	XXh	
ACBCTL2	Byte	FF FECAh	Read/Write	00h	
ACBADDR2	Byte	FF FECCh	Read/Write	XXh	
ACBCTL3	Byte	FF FECEh	Read/Write	00h	
Timing and Watchdog					
TWCFG	Byte	FF FF20h	Read/Write	00h	
TWCP	Byte	FF FF22h	Read/Write	00h	
TWMT0	Word	FF FF24h	Read/Write	FFFFh	
T0CSR	Byte	FF FF26h	Read/Write	00h	
WDCNT	Byte	FF FF28h	Write Only	0Fh	
WDSDM	Byte	FF FF2Ah	Write Only	5Fh	
Multi-Function Timer					
TCNT1	Word	FF FF40h	Read/Write	XXh	
TCRA	Word	FF FF42h	Read/Write	XXh	
TCRB	Word	FF FF44h	Read/Write	XXh	
TCNT2	Word	FF FF46h	Read/Write	XXh	
TPRSC	Byte	FF FF48h	Read/Write	00h	
TCKC	Byte	FF FF4Ah	Read/Write	00h	
TCTRL	Byte	FF FF4Ch	Read/Write	00h	
TICTL	Byte	FF FF4Eh	Read/Write	00h	
TICLR	Byte	FF FF50h	Read/Write	00h	

Register Name	Size	Address	Access Type	Value After Reset	Comments
Versatile Timer Unit					
MODE	Word	FF FF80h	Read/Write	0000h	
IO1CTL	Word	FF FF82h	Read/Write	0000h	
IO2CTL	Word	FF FF84h	Read/Write	0000h	
INTCTL	Word	FF FF86h	Read/Write	0000h	
INTPND	Word	FF FF88h	Read/Write	0000h	
CLK1PS	Word	FF FF8Ah	Read/Write	0000h	
COUNT1	Word	FF FF8Ch	Read/Write	0000h	
PERCAP1	Word	FF FF8Eh	Read/Write	0000h	
DTYCAP1	Word	FF FF90h	Read/Write	0000h	
COUNT2	Word	FF FF92h	Read/Write	0000h	
PERCAP2	Word	FF FF94h	Read/Write	0000h	
DTYCAP2	Word	FF FF96h	Read/Write	0000h	
CLK2PS	Word	FF FF98h	Read/Write	0000h	
COUNT3	Word	FF FF9Ah	Read/Write	0000h	
PERCAP3	Word	FF FF9Ch	Read/Write	0000h	
DTYCAP3	Word	FF FF9Eh	Read/Write	0000h	
COUNT4	Word	FF FFA0h	Read/Write	0000h	
PERCAP4	Word	FF FFA2h	Read/Write	0000h	
DTYCAP4	Word	FF FFA4h	Read/Write	0000h	

26.0 Register Bit Fields

The following tables show the functions of the bit fields of the device registers. For more information on using these registers, see the detailed description of the applicable function elsewhere in this data sheet.

Bluetooth LLC Registers	7	6	5	4	3	2	1	0
PLN	Reserved					PLN[2:0]		
WHITENING_ CHANNEL_ SELECTION	Reserved					CHANNEL_ SELECTION[1:0]		WHITENING
SINGLE_FREQUENCY _SELECTION	Reserved	SINGLE_FREQUENCY_SEL[6:0]						
LN_BT_CLOCK_0	LN_BT_CLOCK[7:0]							
LN_BT_CLOCK_1	LN_BT_CLOCK[15:8]							
LN_BT_CLOCK_2	LN_BT_CLOCK[23:16]							
LN_BT_CLOCK_3	Reserved				LN_BT_CLOCK[27:23]			
RX_CN	Reserved	RX_CN[6:0]						
TX_CN	Reserved	TX_CN[6:0]						
AC_ACCEPTLVL[7:0]	AC_ACCEPTLVL[7:0]							
AC_ACCEPTLVL[15:8]	Reserved						AC_ACCEPTLVL[9:8]	
LAP_ACCEPTLVL	Reserved		LAP_ACCEPTLVL[5:0]					
RFSYNCH_DELAY	Reserved		RFSYNCH_DELAY[5:0]					
SPI_READ[7:0]	SPI_READ[7:0]							
SPI_READ[15:8]	SPI_READ[15:8]							
SPI_MODE_CONFIG	Reserved		SPI_CLK_CONF[1:0]		SPI_LEN_ CONF	SPI_DATA _CONF3	SPI_DATA _CONF2	SPI_DATA_ CONF1
M_COUNTER_0	M_COUNTER[7:0]							
M_COUNTER_1	M_COUNTER[15:8]							
M_COUNTER_2	Reserved			M_COUNTER[20:16]				
N_COUNTER_0	N_COUNTER[7:0]							
N_COUNTER_1	Reserved						N_COUNTER[9:8]	
BT_CLOCK_WR_0	BT_CLOCK_WR[7:0]							
BT_CLOCK_WR_1	BT_CLOCK_WR[15:8]							
BT_CLOCK_WR_2	BT_CLOCK_WR[23:16]							
BT_CLOCK_WR_3	Reserved				BT_CLOCK_WR[27:24]			
WTPTC_1SLOT[7:0]	WTPTC_1SLOT[7:0]							
WTPTC_1SLOT[15:8]	WTPTC_1SLOT[15:8]							
WTPTC_3SLOT[7:0]	WTPTC_3SLOT[7:0]							
WTPTC_3SLOT[15:8]	WTPTC_3SLOT[15:8]							
WTPTC_5SLOT[7:0]	WTPTC_5SLOT[7:0]							

Bluetooth LLC Registers	7	6	5	4	3	2	1	0
WTPTC_5SLOT[15:8]	WTPTC_5SLOT[15:8]							
SEQ_RESET	Reserved							SEQ_RESET
SEQ_CONTINUE	Reserved							SEQ_ CONTINUE
RX_STATUS	Reserved	HEC Error	Header Error Correction	AM_ ADDR Error	Payload CRC Error	Payload Error Correction	Payload Length Error	PACKET_ DONE
CHIP_ID	Reserved				CHIP_ID			
INT_VECTOR	INT_VECTOR[7:0]							
SYSTEM_CLK_EN	Reserved				CLK_EN3	CLK_EN2	INT_SEQ_ EN	BUS_EN
LINK_TIMER_WR_RD[7:0]	LINKTIMER_WR_RD[7:0]							
LINK_TIMER_WR_RD[15:8]	LINKTIMER_WR_RD[15:8]							
LINK_TIMER_SELECT	Reserved				LINKTIMER_SELECT			
LINK_TIMER_STATUS_ EXP_FLAG	LINK_TIMER_STATUS_EXP_FLAG[7:0]							
LINK_TIMER_STATUS_ RD_WR_FLAG	Reserved						LINK- TIMER _WRITE_ DONE	LINKTIMER_ READ_ VALID
LINK_TIMER_AD_JUST _PLUS	LINKTIMER_ADJUST_PLUS[7:0]							
LINK_TIMER_AD_JUST _MINUS	LINKTIMER_ADJUST_MINUS[7:0]							
SLOTTIMER_WR_RD	Reserved		SLOT_TIMER_WR_RD[5:0]					

CAN Control/ Status	15	14	13	12	11	10	9	8	7	6	5	4	3	2	1	0
CGCR	Reserved				EIT	DIAG EN	INTE RNAL	LOOP BACK	IGN ACK	LO	DD IR	TST PEN	BUFF LOCK	CRX	CTX	CAN EN
CTIM	PSC[6:0]							SJW[1:0]		TSEG1[3:0]				TSEG2[2:0]		
GMSKB	GM[28:18]											RTR	IDE	GM[17:15]		
GMSKX	GM[14:0]															XRTR
BMSKB	BM[28:18]											RTR	IDE	BM[17:15]		
BMSKX	BM[14:0]															XRTR
CIEN	EI EN	IEN[14:0]														
CIPND	EI PND	IPND[14:0]														
CICLR	EI CLR	ICLR[14:0]														
CICEN	EI CEN	ICEN[14:0]														
CSTPND	Reserved								NS[2:0]			IRQ	IST[3:0]			
CANEC	REC[7:0]								TEC[7:0]							
CEDIAG	Res.	DRI VE	MON	CRC	STU FF	TXE	EBID[5:0]						EFID[3:0]			
CTMR	CTMR[15:0]															

CAN Memory Registers	15	14	13	12	11	10	9	8	7	6	5	4	3	2	1	0
CMBn.ID1	XI28 ID10	XI27 ID9	XI26 ID8	XI25 ID7	XI24 ID6	XI23 ID5	XI22 ID4	XI21 ID3	XI20 ID2	XI19 ID1	XI18 ID0	SRR RTR	IDE	XI17	XI16	XI15
CMBn.ID0	XI14	XI13	XI12	XI11	XI10	XI9	XI8	XI7	XI6	XI5	XI4	XI3	XI2	XI1	XI0	RTR
CMBn.DATA0	Data 1.7	Data 1.6	Data 1.5	Data 1.4	Data 1.3	Data 1.2	Data 1.1	Data 1.0	Data 2.7	Data 2.6	Data 2.5	Data 2.4	Data 2.3	Data 2.2	Data 2.1	Data 2.0
CMBn.DATA1	Data 3.7	Data 3.6	Data 3.5	Data 3.4	Data 3.3	Data 3.2	Data 3.1	Data 3.0	Data 4.7	Data 4.6	Data 4.5	Data 4.4	Data 4.3	Data 4.2	Data 4.1	Data 4.0
CMBn.DATA2	Data 5.7	Data 5.6	Data 5.5	Data 5.4	Data 5.3	Data 5.2	Data 5.1	Data 5.0	Data 6.7	Data 6.6	Data 6.5	Data 6.4	Data 6.3	Data 6.2	Data 6.1	Data 6.0
CMBn.DATA3	Data 7.7	Data 7.6	Data 7.5	Data 7.4	Data 7.3	Data 7.2	Data 7.1	Data 7.0	Data 8.7	Data 8.6	Data 8.5	Data 8.4	Data 8.3	Data 8.2	Data 8.1	Data 8.0
CMBn.TSTP	TSTP 15	TSTP 14	TSTP 13	TSTP 12	TSTP 11	TSTP 10	TSTP 9	TSTP 8	TSTP 7	TSTP 6	TSTP 5	TSTP 4	TSTP 3	TSTP 2	TSTP 1	TSTP 0
CMBn.CNSTAT	DLC3	DLC2	DLC1	DLC0	Reserved				PRI3	PRI2	PRI1	PRI0	ST3	ST2	ST1	ST0

DMAC Registers	20..16	15	14	13	12	11	10	9	8	7	6	5	4	3	2	1	0
ADCA	Device A Address Counter																
ADRA	Device A Address																
ADCB	Device B Address Counter																
ADRB	Device B Address																
BLTC	N/A	Block Length Counter															
BLTR	N/A	Block Length															
DMACNTL	N/A	Res.	INCB		ADB	INCA		ADA	SW RQ	Res.	OT	DIR	IND	TCS	EO VR	ETC	CH EN
DMASTAT	N/A									Reserved				VLD	CH AC	OVR	TC

System Configuration Registers	7	6	5	4	3	2	1	0
MCFG	Reserved	MEM_IO_ SPEED	MISC_IO_ SPEED	Reserved	SCLKOE	MCLKOE	PLLCLKOE	EXIOE
DBGCFG	Reserved						FREEZE	ON
MSTAT	Reserved			DPGM BUSY	PGMBUSY	OENV2	OENV1	OENV0

BIU Registers	15	12	11	10	9	8	7	6	5	4	3	2	1	0
BCFG	Reserved													EWR
IOCFG	Reserved				IPST	Res.	BW	Reserved		HOLD		WAIT		
SZCFG0	Reserved		FRE	IPRE	IPST	Res.	BW	WBR	RBE	HOLD		WAIT		
SZCFG1	Reserved		FRE	IPRE	IPST	Res.	BW	WBR	RBE	HOLD		WAIT		
SZCFG2	Reserved		FRE	IPRE	IPST	Res.	BW	WBR	RBE	HOLD		WAIT		

TBI Register	7	6	5	4	3	2	1	0
TMODE	Reserved			TSTEN	ENMEM		TMSEL	

Flash Program Memory Interface Registers	15	14	13	12	11	10	9	8	7	6	5	4	3	2	1	0
FMIBAR	Reserved								IBA							
FMIBDR	IBD															
FM0WER	FM0WE[15:0]															
FM1WER	FM1WE[15:0]															
FM2WER	FM2WE[15:0]															
FM3WER	FM3WE[15:0]															
FMCTRL	Reserved								MER	PER	PE	IENP ROG	DIS VRF	Res.	CWD	LOW PRW
FMSTAT	Reserved											DE RR	FM FULL	FM BUSY	PERR	EERR
FMPSR	Reserved											FTDIV[4:0]				
FMSTART	Reserved								FTSTART[7:0]							
FMTRAN	Reserved								FTTRAN[7:0]							
FMPROG	Reserved								FTPROG[7:0]							
FMPERASE	Reserved								FTPER[7:0]							
FMMERASE0	Reserved								FTMER[7:0]							
FMEND	Reserved								FTEND[7:0]							
FMMEND	Reserved								FTMEND[7:0]							
FMRCV	Reserved								FTRCV[7:0]							
FMAR0	Reserved															Res.
FMAR1	WRPROT			RDPROT			ISPE			EMPTY			BOOTAREA			
FMAR2	CADR15:0															

Flash Data Memory Interface Registers	15	14	13	12	11	10	9	8	7	6	5	4	3	2	1	0
FSMIBAR	Reserved								IBA							
FSMIBDR	IBD															
FSM0WER	FM0WE[15:0]															
FSM1WER	FM1WE[15:0]															
FSM2WER	FM2WE[15:0]															
FSM3WER	FM3WE[15:0]															

Flash Data Memory Interface Registers	15	14	13	12	11	10	9	8	7	6	5	4	3	2	1	0
FSMCTRL	Reserved								MER	PER	PE	IENPROG	DISVRF	Res.	CWD	LOWPRW
FSMSTAT	Reserved											DERR	FMFULL	FMBUSY	PERR	EERR
FSMPSR	Reserved												FTDIV[3:0]			
FSMSTART	Reserved								FTSTART[7:0]							
FSMTRAN	Reserved								FTTRAN[7:0]							
FSMPROG	Reserved								FTPROG[7:0]							
FSMPERASE	Reserved								FTPER[7:0]							
FSMMERASE0	Reserved								FTMER[7:0]							
FSMEND	Reserved								FTEND[7:0]							
FSMMEND	Reserved								FTMEND[7:0]							
FSMRCV	Reserved								FTRCV[7:0]							
FSMAR0	Reserved															Res.
FSMAR1	WRPROT			RDPROT			ISPE			EMPTY			BOOTAREA			
FSMAR2	CADR15:0															

CVSD/PCM Registers	15	14	13	12	11	10	9	8	7	6	5	4	3	2	1	0
CVSDIN	CVSDIN															
CVSDOUT	CVSDOUT															
PCMIN	PCMIN															
PCMOUT	PCMOUT															
LOGIN	Reserved								LOGIN							
LOGOUT	Reserved								LOGOUT							
LINEARIN	LINEARIN															
LINEAROUT	LINEAROUT															
CVCTRL	Reserved				PCMCONV	CVSDCONV		DMAPI	DMAPO	DMACI	DMACO	CVSDERRINT	CVSDINT	PCMINT	CLKEN	CVEN
CVSTAT	Reserved					CVOUTST			CVINST			CVF	CVE	PCMINT	CVNF	CVNE
CVTEST	Reserved											TEST_VAL	ENC_IN	DEC_EN	RT	TB
CVRADD	Reserved									CVRADD[6:0]						
CVRDAT	CVRDAT[15:0]															

CVSD/PCM Registers	15	14	13	12	11	10	9	8	7	6	5	4	3	2	1	0
CVDECOUT	CVDECOUT[15:0]															
CVENCIN	CVENCIN[15:0]															
CVENCPR	CVENCPRT[15:0]															

CLK3RES Registers	7	6	5	4	3	2	1	0
CRCTRL	Reserved		POR	ACE2	ACE1	PLLPWD	FCLK	SCLK
PRSFC	Reserved	MODE			FCDIV			
PRSSC	SCDIV							
PRSAC	ACDIV2				ACDIV1			

PMM Register	7	6	5	4	3	2	1	0
PMMCR	HCCH	HCCM	DHC	DMC	WBPSM	HALT	IDLE	PSM
PMMSR	Reserved					OHC	OMC	OLC

\

MIWU16 Registers	15 14	13 12	11 10	9 8	7 6	5 4	3 2	1 0
WKEDG	WKED							
WKENA	WKEN							
WKICTL1	WKINTR7	WKINTR6	WKINTR5	WKINTR4	WKINTR3	WKINTR2	WKINTR1	WKINTR0
WKICTL2	WKINTR15	WKINTR14	WKINTR13	WKINTR12	WKINTR11	WKINTR10	WKINTR9	WKINTR8
WKPND	WKPD							
WKPCL	WKCL							
WKIENA	WKIEN							

GPIO Registers	7	6	5	4	3	2	1	0
PxALT	Px Pins Alternate Function Enable							
PxDIR	Px Port Direction							
PxDIN	Px Port Output Data							
PxDOUT	Px Port Input Data							
PxWPU	Px Port Weak Pull-Up Enable							
PxHDRV	Px Port High Drive Strength Enable							
PxALTS	Px Pins Alternate Function Source Selection							

AAI Registers	15	14	13	12	11	10	9	8	7	6	5	4	3	2	1	0
ARSR	ARSH								ARSL							
ATSR	ATSH								ATSL							
ARFR	ARFH								ARFL							
ARDR0	ARDH								ARDL							
ARDR1	ARDH								ARDL							
ARDR2	ARDH								ARDL							
ARDR3	ARDH								ARDL							
ATFR	ATFH								ARFL							
ATDR0	ATDH								ATDL							
ATDR1	ATDH								ATDL							
ATDR2	ATDH								ATDL							
ATDR3	ATDH								ATDL							
AGCR	CLK EN	AAI EN	IOM2	IFS	FSL[1:0]		CTF	CRF	IEBC	FSS	IEFS	SCS[1:0]		LPB	DWL	ASS
AISCR	Reserved				TX EIC	TX IC	RX EIC	RX IC	TX EIP	TX IP	RX EIP	RX IP	TX EIE	TX IE	RX EIE	RX IE
ARSCR	RXFWM[3:0]				RXDSA[3:0]				RXSA[3:0]				RXO	RXE	RXF	RX AF
ATSCR	TXFWM[3:0]				TXDSA[3:0]				TXSA[3:0]				TXU	TXF	TXE	TXAE
ACCR	BCPRS[7:0]								FCPRS[6:0]							CSS
ADMACR	Reserved			ACO[1:0]		ACD{2:0]			TMD[3:0]				RMD[3:0]			

ICU Registers	15 . . . 12	11 . . . 8	7	6	5	4	3	2	1	0
IVCT	Reserved		0	0	INTVECT[5:0]					
ISTAT0	IST(15:0)									
ISTAT1	IST(31:16)									
IENAM0	IENA(15:0)									
IENAM1	IENA(31:16)									

UART Registers	7	6	5	4	3	2	1	0
UTBUF	UTBUF							
URBUF	URBUF							
UICTRL	UEEI	UERI	UETI	UEFCI	UCTS	UDCTS	URBF	UTBE
USTAT	Reserved	UXMIP	URB9	UBKD	UERR	UDOE	UFE	UPE
UFRS	Reserved	UPEN	UPSEL		UXB9	USTP	UCHAR	
UMDSL1	URTS	UFCE	UERD	UETD	UCKS	UBRK	UATN	UMOD
UBAUD	UDIV[7:0]							
UPSR	UPSC[4:0]					UDIV[10:8]		
UOVR	Reserved				UOVSR[3:0]			
UMDSL2	Reserved							USMD
USPOS	Reserved				USAMP[3:0]			

MWSPI16 Registers	15 . . . 9	8	7	6	5	4	3	2	1	0
MWDAT	MWDAT									
MWCTL1	SCDV	SCIDL	SCM	EIW	EIR	EIO	ECHO	MOD	MNS	MWEN
MWSTAT	Reserved							OVR	RBF	BSY

ACB Registers	7	6	5	4	3	2	1	0
ACBSDA	DATA							
ACBST	SLVSTP	SDAST	BER	NEGACK	STASTR	NMATCH	MASTER	XMIT
ACBCST	ARPMATCH	MATCHAF	TGSCL	TSDA	GMATCH	MATCH	BB	BUSY
ACBCTL1	STASTRE	NMINTE	GCMEN	ACK	Reserved	INTEN	STOP	START
ACBADDR	SAEN	ADDR						
ACBCTL2	SCLFRQ[6:0]							ENABLE
ACBADDR2	SAEN	ADDR						
ACBCTL3	Reserved					ARPEN	SCLFRQ[8:7]	

TWM Registers	15 . . . 8	7	6	5	4	3	2	1	0
TWCFG	Reserved	Reserved		WDSDME	WDCT0I	LWDCNT	LTWMT0	LTWCP	LTWCFG
TWCP	Reserved	Reserved					MDIV		
TWMT0	PRESET								
T0CSR	Reserved	Reserved			FRZT0E	WDTLD	T0INTE	TC	RST
WDCNT	Reserved	PRESET							
WDSDM	Reserved	RSTDATA							

MFT16 Registers	15 . . . 8	7	6	5	4	3	2	1	0
TCNT1	TCNT1								
TCRA	TCRA								
TCRB	TCRB								
TCNT2	TCNT2								
TPRSC	Reserved	Reserved			CLKPS				
TCKC	Reserved	Reserved		C2CSEL			C1CSEL		
TCTRL	Reserved	TEN	TAOUT	TBEN	TAEN	TBEDG	TAEDG	TMDSEL	
TICTL	Reserved	TDIEN	TCIEN	TBIEN	TAIEN	TDPND	TCPND	TBPND	TAPND
TICLR	Reserved	Reserved				TDCLR	TCCLR	TBCLR	TACLR

VTU Registers	15	14	13	12	11	10	9	8	7	6	5	4	3	2	1	0
MODE	TMOD4		T8 RUN	T7 RUN	TMOD3		T6 RUN	T5 RUN	TMOD2		T4 RUN	T3 RUN	TMOD1		T2 RUN	T1 RUN
IO1CTL	P4 POL	C4EDG			P3 POL	C3EDG			P2 POL	C2EDG			P1 POL	C1EDG		
IO2CTL	P7 POL	C7EDG			P6 POL	C6EDG			P5 POL	C5EDG			P5 POL	C5EDG		
INTCTL	I4DEN	I4CEN	I4BEN	I4AEN	I3DEN	I3CEN	I3BEN	I3AEN	I2DEN	I2CEN	I2BEN	I2AEN	I1DEN	I1CEN	I1BEN	I1AEN
INTPND	I4DPD	I4CPD	I4BPD	I4APD	I3DPD	I3CPD	I3BPD	I3APD	I2DPD	I2CPD	I2BPD	I2APD	I1DPD	I1CPD	I1BPD	I1APD
CLK1PS	C2PRSC								C1PRSC							
COUNT1	CNT1															
PERCAP1	PCAP1															
DTYCAP1	DCAP1															
COUNT2	CNT2															
PERCAP2	PCAP2															
DTYCAP2	DCAP2															
CLK2PS	C4PRSC								C3PRSC							
COUNT3	CNT3															
PERCAP3	PCAP3															
DTYCAP3	DCAP3															
COUNT4	CNT4															
PERCAP4	PCAP4															
DTYCAP4	DCAP4															

27.0 Electrical Characteristics

27.1 ABSOLUTE MAXIMUM RATINGS

If Military/Aerospace specified devices are required, please contact the National Semiconductor Sales Office/Distributors for availability and specifications.

Supply voltage (VCC)	3.6V
All input and output voltages with respect to GND*	-0.5V to IOVCC + 0.5V
ESD protection level	2 kV (Human Body Model)
Allowable sink/source current per signal pin	±10 mA
Total current into IOVCC pins	200 mA
Total current into VCC pins (source)	200 mA
Total current out of GND pins (sink)	200 mA
Latch-up immunity	±200 mA
Storage temperature range	-65°C to +150°C

*Note: Absolute maximum ratings indicate limits beyond which damage to the device may occur. DC and AC electrical specifications are not ensured when operating the device at absolute maximum ratings. *The latch-up tolerance on ACCESS.bus pins exceeds 150 mA.*

27.2 DC ELECTRICAL CHARACTERISTICS (Temperature: -40°C ≤ T_A ≤ +85°C)

Symbol	Parameter	Conditions	Min	Max	Units
Vcc	Digital Logic Supply Voltage		2.25	2.75	V
IOVcc	I/O Supply Voltage		2.25	3.63	V
AVcc	Analog PLL Supply Voltage		2.25	2.75	V
V_{IL}	Logical 0 Input Voltage (except X2CKI)		-0.5 [a]	0.3 Vcc	V
V_{IH}	Logical 1 Input Voltage (except X2CKI)		0.7 IOVcc	IOVcc + 0.5 [a]	V
Vxl1	X1CKI Low Level Input Voltage	External X1 clock	-0.5 [a]	0.3 Vcc	V
Vxh1	X1CKI High Level Input Voltage OSC	External X1 clock	0.7 Vcc	Vcc + 0.5	V
Vxl2	X2CKI Logical 0 Input Voltage	External X2 clock	-0.5 [a]	0.6	V
Vxh2	X2CKI Logical 1 Input Voltage	External X2 clock	0.7 Vcc	Vcc + 0.5	V
V_{hys}	Hysteresis Loop Width [a]		0.1 IOVcc		V
I_{OH}	Logical 1 Output Current	V_{OH} = 1.8V, IOVcc = 2.25V	-1.6		mA
I_{OL}	Logical 0 Output Current	V_{OL} = 0.45V, IOVcc = 2.25V	1.6		mA
I_{OLACB}	SDA, SCL Logical 0 Output Current	V_{OL} = 0.4V, IOVcc = 2.25V	3.0		mA
I_{OHW}	Weak Pull-up Current	V_{OH} = 1.8V, IOVcc =2.25V	-10		µA
I_{IL}	$\overline{\text{RESET}}$ pin Weak Pull-down Current	V_{IL} = 0.45V, IOVcc = 2.25V		0.4	µA
I_L	High Impedance Input Leakage Current	0V ≤ Vin ≤ IOVcc	-2.0	2.0	µA
$I_{O(Off)}$	Output Leakage Current (I/O pins in input mode)	0V ≤ Vout ≤ Vcc	-2.0	2.0	µA
Icca1	Digital Supply Current Active Mode [b]	Vcc = 2.75V, IOVcc = 3.63V		12	mA
Icca2	Digital Supply Current Active Mode [c]	Vcc = 2.75V, IOVcc = 3.63V		8	mA
Iccprog	Digital Supply Current Active Mode [d]	Vcc = 2.75V, IOVcc = 3.63V		15	mA

Symbol	Parameter	Conditions	Min	Max	Units
Iccps	Digital Supply Current Power Save Mode [e]	Vcc = 2.75V, IOVcc = 3.63V		4.0	mA
Iccid	Digital Supply Current Idle Mode [f]	Vcc = 2.75V, IOVcc = 3.63V		950	µA
Iccq	Digital Supply Current Halt Mode [f,g]	Vcc = 2.75V, IOVcc = 3.63V		700	µA

a. Guaranteed by design

b. Test code executing from internal RAM. No peripheral blocks other than PLL and Auxiliary Clock enabled. X1CLKI is 24 MHz. Not programming Flash memory. Typical applications will show 16 mA (Icca1 + 4 mA) at 24 MHz executing code from flash memory.

c. Waiting for interrupt on executing WAIT instruction, Iout = 0 mA, X1CKI = 12 MHz, PLL enabled (4×), internal system clock is 24 MHz, not programming Flash memory

d. Same conditions as Icca1, but programming or erasing Flash memory page

e. Running from internal memory (RAM), Iout = 0 mA, XCKI1 = 12 MHz, PLL disabled, X2CKI = 32.768 kHz, device put in power-save mode, Slow Clock derived from XCKI1

f. Iout = 0 mA, XCKI1 = off, X2CKI = 32.768 kHz

g. Halt current approximately doubles for every 20°C.

27.3 FLASH MEMORY ON-CHIP PROGRAMMING

Symbol	Parameter	Conditions	Min	Max	Units
t_{START}	Program/Erase to NVSTR Setup Time[a] (NVSTR = Non-Volatile Storage		5	-	µs
t_{TRAN}	NVSTR to Program Setup Time[b]		10	-	µs
t_{PROG}	Programming Pulse Width[c]		20	40	µs
t_{PERASE}	Page Erase Pulse Width[d]		20	-	ms
t_{MERASE}	Module Erase Pulse Width[e]		200	-	ms
t_{END}	NVSTR Hold Time[f]		5	-	µs
t_{MEND}	NVSTR Hold Time (Module Erase)[g]		100	-	µs
t_{RCV}	Recovery Time[h]		1	-	µs
t_{HV}	Cumulative Program High Voltage Period For Each Row After Erase[i]	128K program blocks	-	8	ms
t_{HV}		8K data block	-	4	ms
	Write/Erase Endurance		20,000	-	cycles
	Data Retention	25°C	100	-	years

a. Program/erase to NVSTR Setup Time is determined by the following equation:
$t_{START} = T_{clk} \times (FTDIV + 1) \times (FTSTART + 1)$, where T_{clk} is the System Clock period, FTDIV is the contents of the FMPSR or FSMPSR register, and FTSTART is the contents of the FMSTART or FSMSTART register

b. NVSTR to Program Setup Time is determined by the following equation:
$t_{TRAN} = T_{clk} \times (FTDIV + 1) \times (FTTRAN + 1)$, where T_{clk} is the System Clock period, FTDIV is the contents of the FMPSR or FSMPSR register, and FTTRAN is the contents of the FMTRAN or FSMTRAN register

c. Programming Pulse Width is determined by the following equation:
$t_{PROG} = T_{clk} \times (FTDIV + 1) \times 8 \times (FTPROG + 1)$, where T_{clk} is the System Clock period, FTDIV is the contents of the FMPSR or FSMPSR register, and FTPROG is the contents of the FMPROG or FSMPROG register

d. Page Erase Pulse Width is determined by the following equation:
$t_{PERASE} = T_{clk} \times (FTDIV + 1) \times 4096 \times (FTPER + 1)$, where T_{clk} is the System Clock period, FTDIV is the contents of the FMPSR or FSMPSR register, and FTPER is the contents of the FMPERASE or FSMPERASE register

e. Module Erase Pulse Width is determined by the following equation:
$t_{MERASE} = T_{clk} \times (FTDIV + 1) \times 4096 \times (FTMER + 1)$, where T_{clk} is the System Clock period, FTDIV is the contents of the FMPSR or FSMPSR register, and FTMER is the contents of the FMMERASE0 or FSMMERASE0 register

f. NVSTR Hold Time is determined by the following equation:
$t_{END} = T_{clk} \times (FTDIV + 1) \times (FTEND + 1)$, where T_{clk} is the System Clock period, FTDIV is the contents of the FMPSR or FSMPSR register, and FTEND is the contents of the FMEND or FSMEND register

g. NVSTR Hold Time (Module Erase) is determined by the following equation:
$t_{MEND} = T_{clk} \times (FTDIV + 1) \times 8 \times (FTMEND + 1)$, where T_{clk} is the System Clock period, FTDIV is the contents of the FMPSR or FSMPSR register, and FTMEND is the contents of the FMMEND or FSMMEND register

h. Recovery Time is determined by the following equation:
$t_{RCV} = T_{clk} \times (FTDIV + 1) \times (FTRCV + 1)$, where T_{clk} is the System Clock period, FTDIV is the contents of the FMPSR or FSMPSR register, and FTRCV is the contents of the FMRCV or FSMRCV register

i. Cumulative program high voltage period for each row after erase t_{HV} is the accumulated duration a flash cell is exposed to the programming voltage after the last erase cycle.

27.4 OUTPUT SIGNAL LEVELS

All output signals are powered by the digital supply (VCC).

Table 72 summarizes the states of the output signals during the reset state (when VCC power exists in the reset state) and during the Power Save mode.

The $\overline{\text{RESET}}$ and $\overline{\text{NMI}}$ input pins are active during the Power Save mode. In order to guarantee that the Power Save current not exceed 1 mA, these inputs must be driven to a voltage lower than 0.5V or higher than VCC - 0.5V. An input voltage between 0.5V and (VCC - 0.5V) may result in power consumption exceeding 1 mA.

Table 72 Output Pins During Reset and Power-Save

Signals on a Pin	Reset State (with Vcc)	Power Save Mode	Comments
PB7:0	TRI-STATE	Previous state	I/O ports will maintain their values when entering power-save mode
PC7:0	TRI-STATE	Previous state	
PG7:0	TRI-STATE	Previous state	
PH7:0	TRI-STATE	Previous state	
PI7:0	TRI-STATE	Previous state	

27.5 CLOCK AND RESET TIMING

Table 73 Clock and Reset Signals

Symbol	Figure	Description	Reference	Min (ns)	Max (ns)
Clock Input Signals					
t_{X1p}	101	X1 period	Rising Edge (RE) on X1 to next RE on X1	83.33	83.33
t_{X1h}	101	X1 high time, external clock	At 2V level (Both Edges)	(0.5 Tclk) - 5	
t_{X1l}	101	X1 low time, external clock	At 0.8V level (Both Edges)	(0.5 Tclk) - 5	
t_{X2p}	101	X2 period [a]	RE on X2 to next RE on X2	10,000	
t_{X2h}	101	X2 high time, external clock	At 2V level (both edges)	(0.5 Tclk) - 500	
t_{X2l}	101	X2 low time, external clock	At 0.8V level (both edges)	(0.5 Tclk) - 500	
t_{IH}	102	Input hold time ($\overline{\text{NMI}}$, RXD1, RXD2)	After RE on CLK	0	
Reset and NMI Input Signals					
t_{IW}	102	$\overline{\text{NMI}}$ Pulse Width	$\overline{\text{NMI}}$ Falling Edge (FE) to RE	20	
t_{RST}	103	$\overline{\text{RESET}}$ Pulse Width	$\overline{\text{RESET}}$ FE to RE	100	
t_R	103	Vcc Rise Time	0.1 Vcc to 0.9 Vcc		

a. Only when operating with an external square wave on X2CKI; otherwise a 32 kHz crystal network must be used between X2CKI and X2CKO. If Slow Clock is internally generated from Main Clock, it may not exceed this given limit.

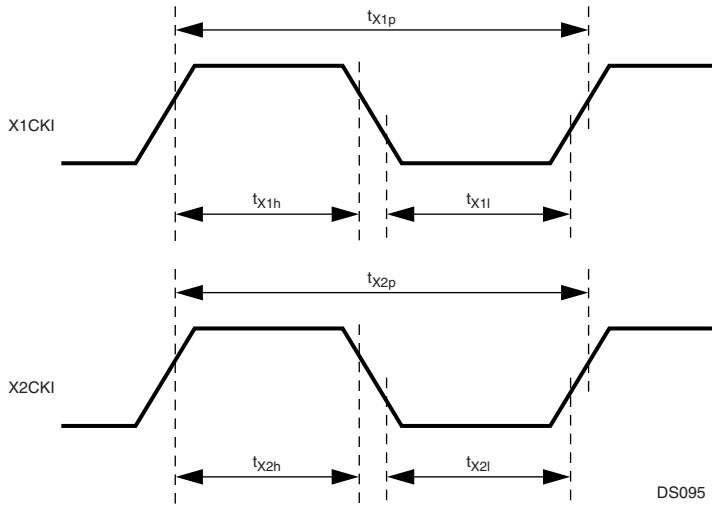

Figure 101. Clock Timing

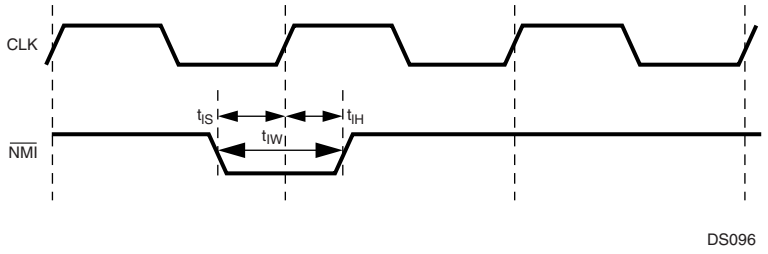

Figure 102. $\overline{\text{NMI}}$ Signal Timing

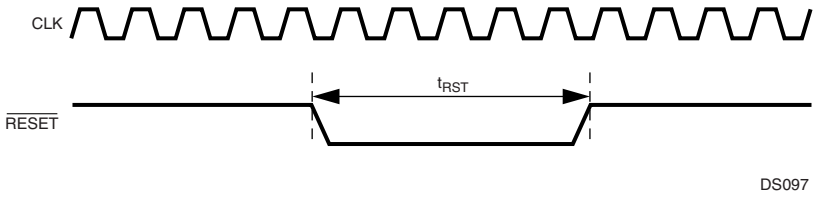

Figure 103. Non-Power-On Reset

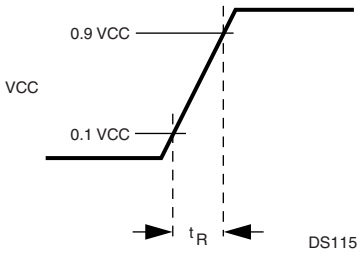

Figure 104. Power-On Reset

27.6 UART TIMING

Table 74 UART Signals

Symbol	Figure	Description	Reference	Min (ns)	Max (ns)
UART Input Signals					
t_{CKX}	105	CKX period (synchronous mode)		250	-
t_{RXS}	105	RXD setup time (synchronous mode)	Before Falling Edge (FE) on CKX	40	-
t_{RXH}	105	RXD hold time (synchronous mode)	Before FE on CKX	40	-
UART Output Signals					
t_{TXD}	105	TXD output valid (synchronous mode)	After Rising Edge (RE) on CKX	-	40

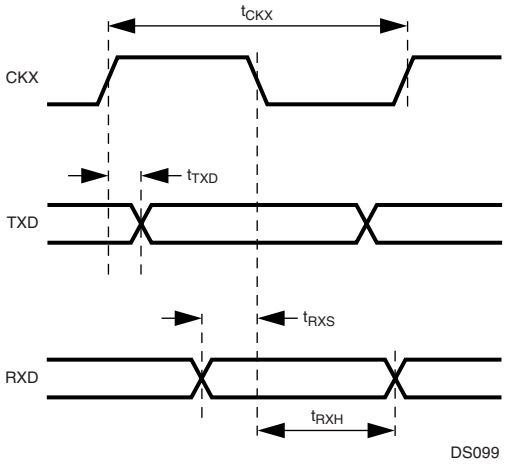

Figure 105. UART Synchronous Mode Timing

27.7 I/O PORT TIMING

Table 75 I/O Port Signals

Symbol	Figure	Description	Reference	Min (ns)	Max (ns)
I/O Port Input Signals					
t_{IS}	106	Input Setup Time	Before Falling Edge (FE) on System Clock	22.5	-
t_{IH}	106	Input Hold Time	After FE on System Clock	0	-
I/O Port Output Signals					
t_{COv1}	106	Output Valid Time	After FE on System Clock	-	3

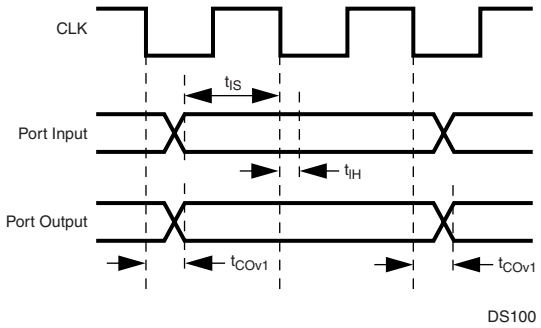

Figure 106. I/O Port Timing

27.8 ADVANCED AUDIO INTERFACE (AAI) TIMING

Table 76 Advanced Audio Interface (AAI) Signals

Symbol	Figure	Description	Reference	Min (ns)	Max (ns)
AAI Input Signals					
t_{RDS}	107,109	Receive Data Setup Time	Before Falling Edge (FE) on SRCLK	20	-
t_{RDH}	107,109	Receive Data Hold Time	After FE on SRCLK	20	-
t_{FSS}	107	Frame Sync Setup Time	Before Rising Edge (RE) on SRCLK	20	-
t_{FSH}	107	Frame Sync Hold Time	After RE on SRCLK	20	-
AAI Output Signals					
t_{CP}	107	Receive/Transmit Clock Period	RE on SRCLK/SCK to RE on SRCLK/SCK	976.6	-
t_{CL}	107	Receive/Transmit Low Time	FE on SRCLK/SCK to RE on SRCLK/SCK	488.3	-
t_{CH}	107	Receive/Transmit High Time	RE on SRCLK/SCK to FE on SRCLK/SCK	488.3	-
t_{FSVH}	107,109	Frame Sync Valid High	RE on SRCLK/SCK to RE on SRFS/SFS	-	20
t_{FSVL}	107,109	Frame Sync Valid Low	RE on SRCLK/SCK to FE on SRFS/SFS	-	20
t_{TDV}	108,110	Transmit Data Valid	RE on SCK to STD Valid	-	20

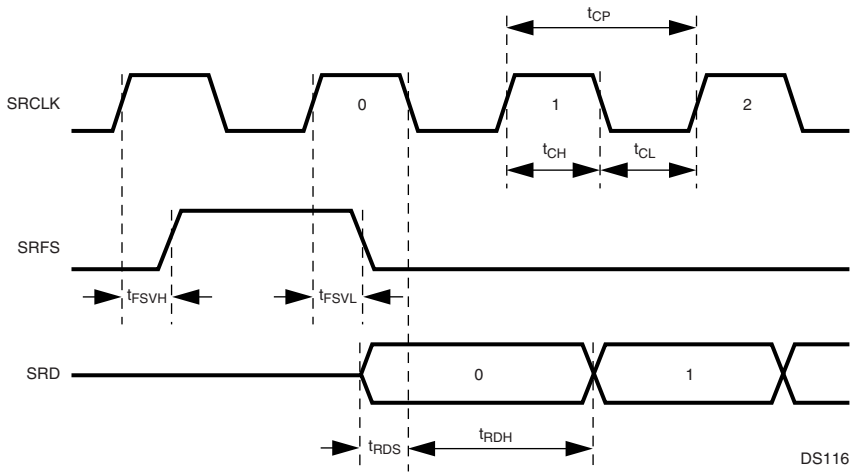

Figure 107. Receive Timing, Short Frame Sync

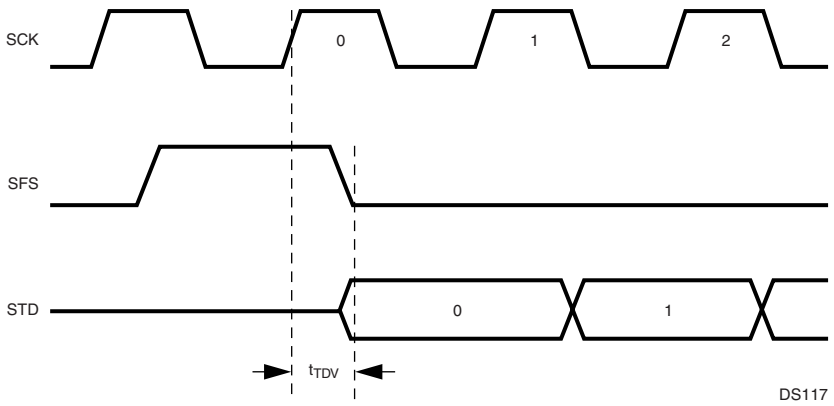

Figure 108. Transmit Timing, Short Frame Sync

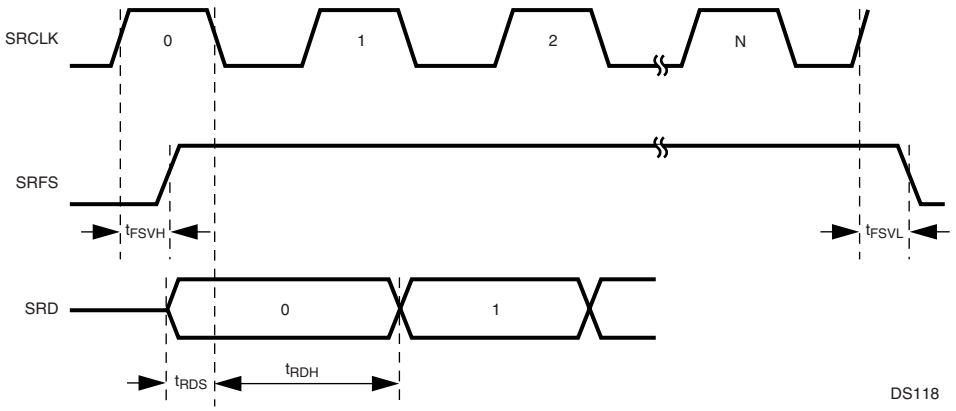

Figure 109. Receive Timing, Long Frame Sync

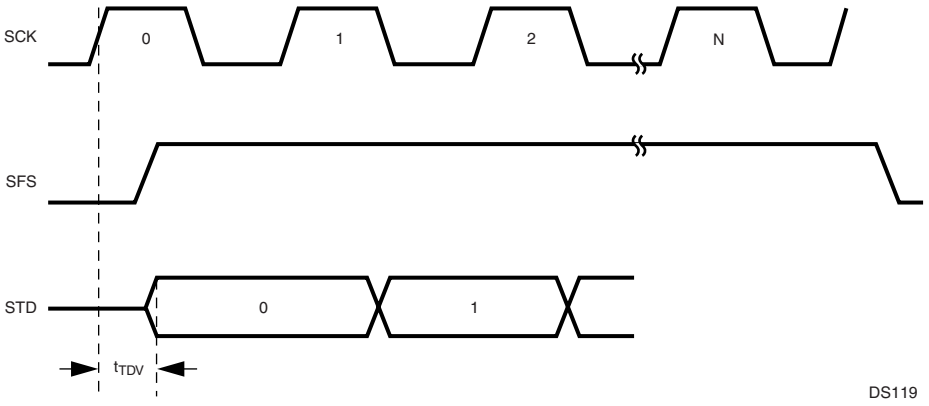

Figure 110. Transmit Timing, Long Frame Sync

27.9 MICROWIRE/SPI TIMING

Table 77 Microwire/SPI Signals

Symbol	Figure	Description	Reference	Min (ns)	Max (ns)
Microwire/SPI Input Signals					
t_{MSKh}	111	Microwire Clock High	At 2.0V (both edges)	80	-
t_{MSKl}	111	Microwire Clock Low	At 0.8V (both edges)	80	-
t_{MSKp}	111	Microwire Clock Period	SCIDL bit = 0; Rising Edge (RE) MSK to next RE MSK	200	-
	112		SCIDL bit = 1; Falling Edge (FE) MSK to next FE MSK		-
t_{MSKh}	111	MSK Hold (slave only)	After $\overline{MWCS}$ goes inactive	40	-
t_{MSKs}	111	MSK Setup (slave only)	Before $\overline{MWCS}$ goes active	80	-
t_{MCSh}	111	$\overline{MWCS}$ Hold (slave only)	SCIDL bit = 0; After FE MSK	40	-
	112		SCIDL bit = 1; After RE MSK		-
t_{MCSs}	111	$\overline{MWCS}$ Setup (slave only)	SCIDL bit = 0; Before RE MSK	80	-
	112		SCIDL bit = 1; Before FE MSK		-
t_{MDIh}	111	Microwire Data In Hold (master)	Normal Mode; After RE MSK	0	-
	113		Alternate Mode; After FE MSK		-
	111	Microwire Data In Hold (slave)	Normal Mode; After RE MSK	40	-
	113		Alternate Mode; After FE MSK		-
t_{MDIs}	111	Microwire Data In Setup	Normal Mode; Before RE MSK	80	-
	113		Alternate Mode; Before FE MSK		-
Microwire/SPI Output Signals					
t_{MSKh}	111	Microwire Clock High	At 2.0V (both edges)	40	-
t_{MSKl}	111	Microwire Clock Low	At 0.8V (both edges)	40	-
t_{MSKp}	111	Microwire Clock Period	SCIDL bit = 0: Rising Edge (RE) MSK to next RE MSK	100	-
	112		SCIDL bit = 1: Falling Edge (FE) MSK to next FE MSK		-
t_{MSKd}	111	MSK Leading Edge Delayed (master only)	Data Out Bit #7 Valid	0.5 t_{MSK}	1.5 t_{MSK}
t_{MDOf}	111	Microwire Data Float [b] (slave only)	After RE on $\overline{MCSn}$	-	25
t_{MDOh}	111	Microwire Data Out Hold	Normal Mode; After FE MSK	0.0	-
	112		Alternate Mode; After RE MSK		
t_{MDOnf}	115	Microwire Data No Float (slave only)	After FE on $\overline{MWCS}$	0	25

Table 77 Microwire/SPI Signals

Symbol	Figure	Description	Reference	Min (ns)	Max (ns)
t_{MDOv}	111	Microwire Data Out Valid	Normal Mode; After FE on MSK	-	25
			Alternate Mode; After RE on MSK		
t_{MITOp}	115	MDODI to MDIDO (slave only)	Propagation Time Value is the same in all clocking modes of the Microwire	-	25

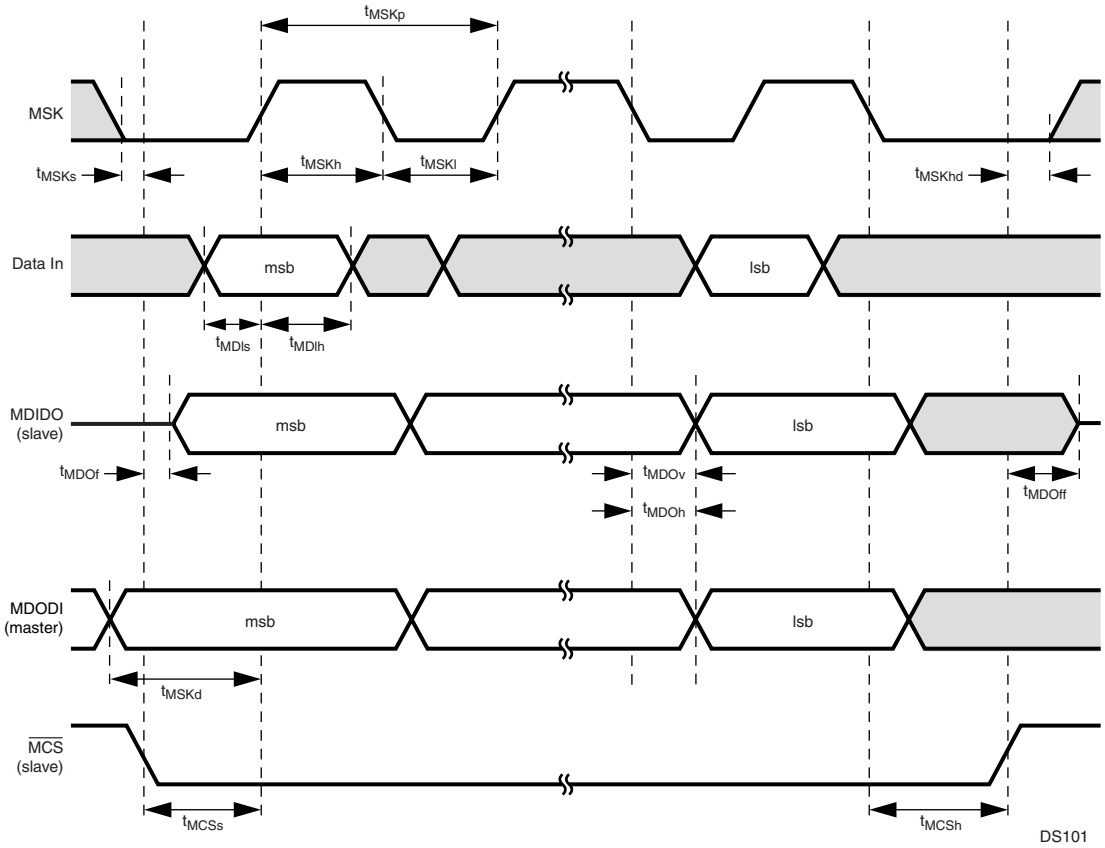

Figure 111. Microwire Transaction Timing, Normal Mode, SCIDL = 0

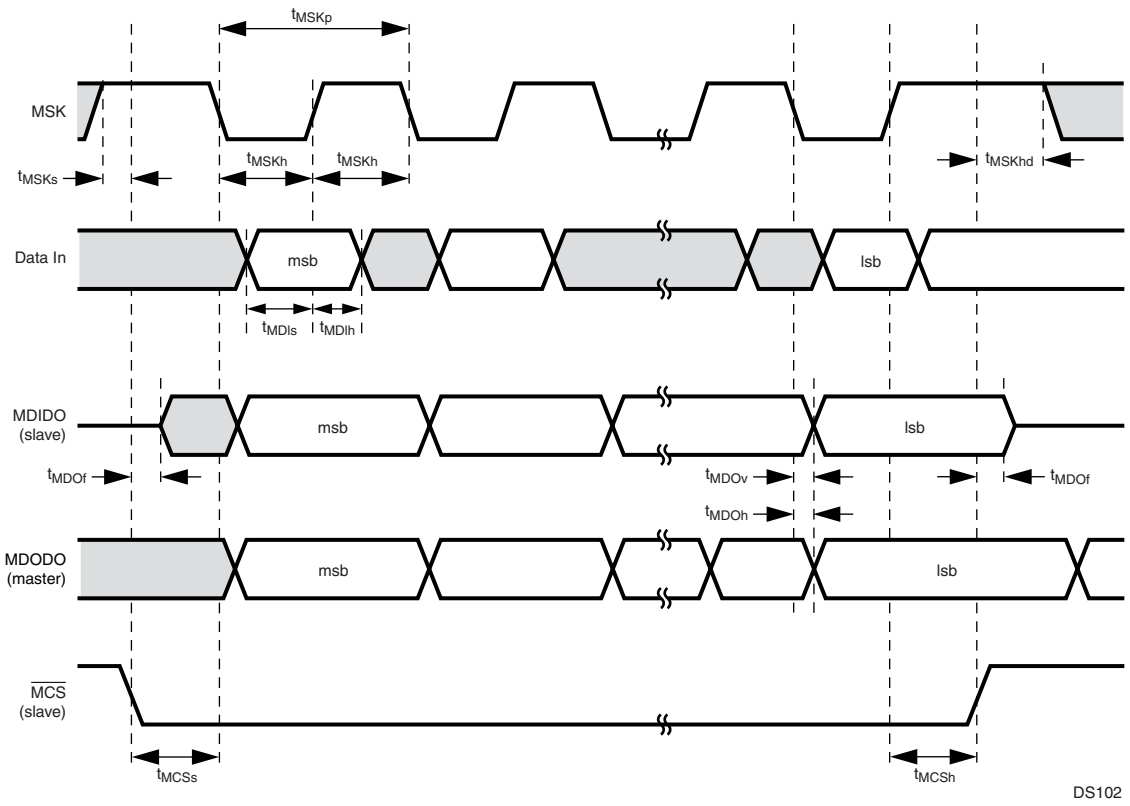

Figure 112. Microwire Transaction Timing, Normal Mode, SCIDL = 1

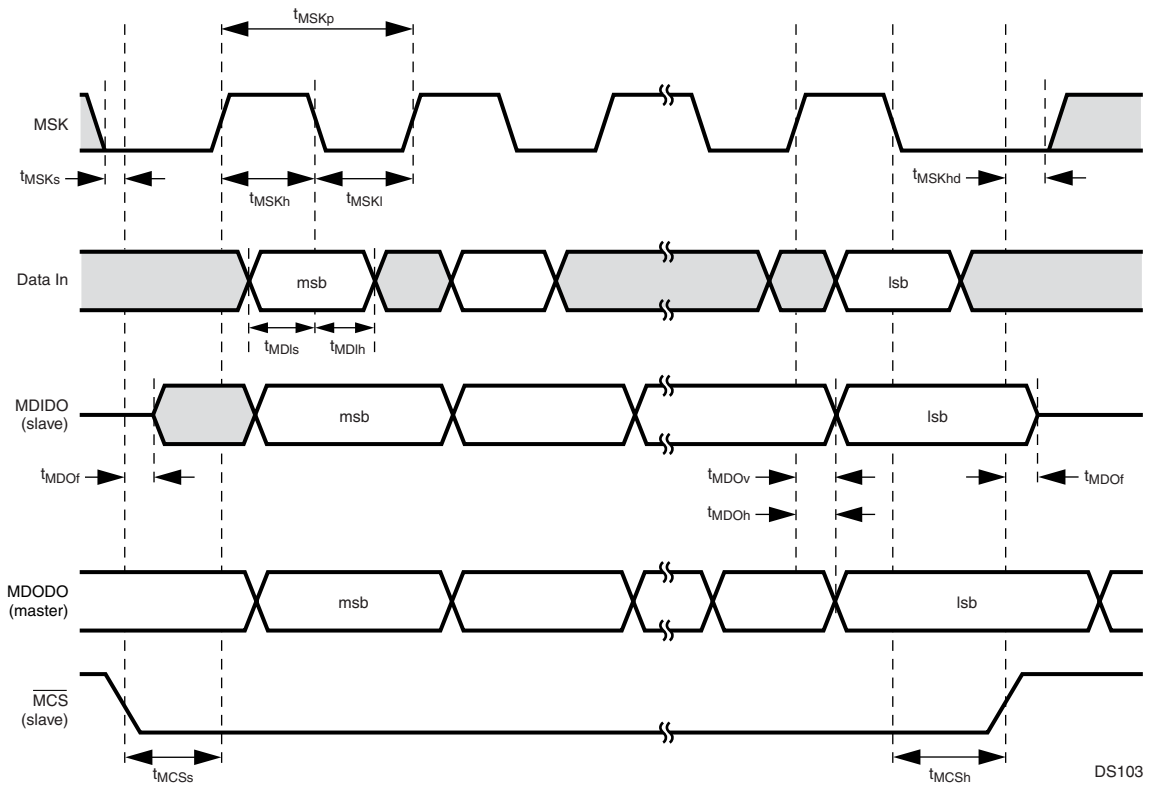

Figure 113. Microwire Transaction Timing, Alternate Mode, SCIDL = 0

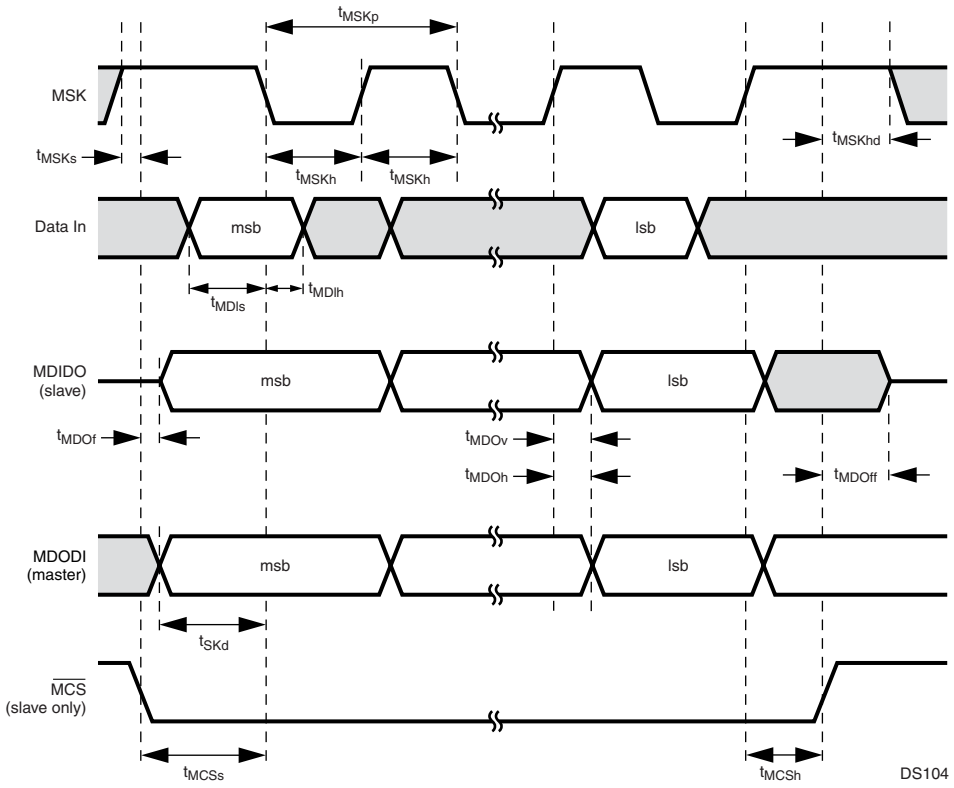

Figure 114. Microwire Transaction Timing, Alternate Mode, SCIDL = 1

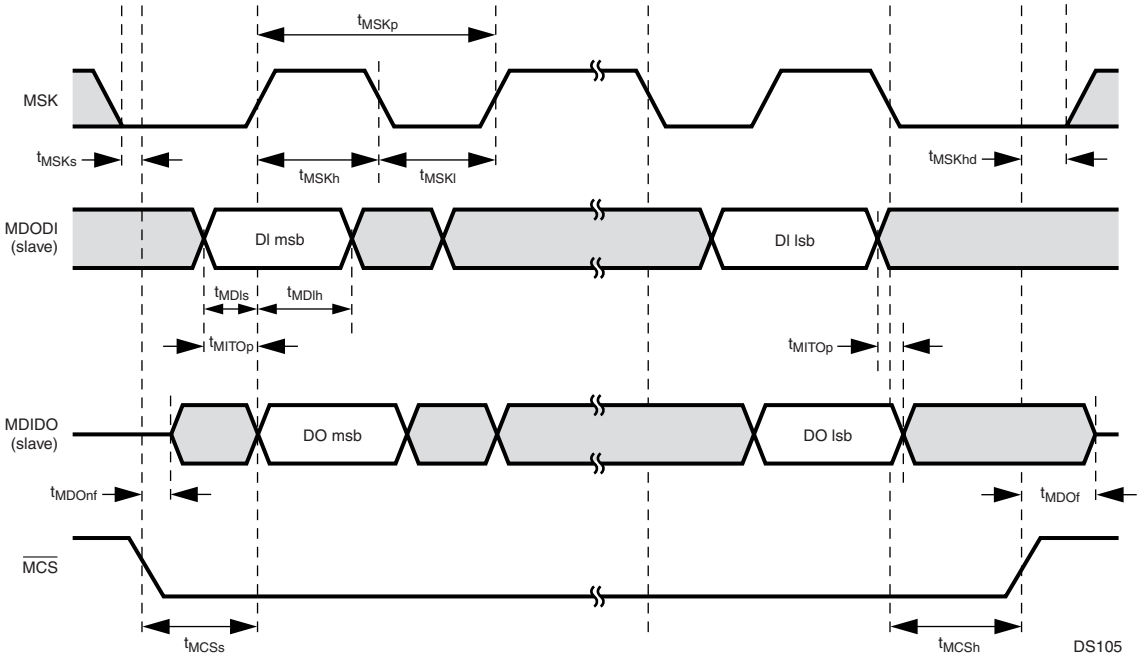

Figure 115. Microwire Transaction Timing, Data Echoed to Output, Normal Mode, SCIDL = 0, ECHO = 1, Slave Mode

27.10 ACCESS.BUS TIMING

Table 78 ACCESS.bus Signals

Symbol	Figure	Description	Reference	Min (ns)	Max (ns)
ACCESS.bus Input Signals					
t_{BUFi}	117	Bus free time between Stop and Start Condition		$t_{SCLhigho}$	-
t_{CSTOsi}	117	SCL setup time	Before Stop Condition	$(8 \times t_{CLK}) - t_{SCLri}$	-
t_{CSTRhi}	117	SCL hold time	After Start Condition	$(8 \times t_{CLK}) - t_{SCLri}$	-
t_{CSTRsi}	117	SCL setup time	Before Start Condition	$(8 \times t_{CLK}) - t_{SCLri}$	-
t_{DHCsi}	118	Data High setup time	Before SCL Rising Edge (RE)	$2 \times t_{CLK}$	-
t_{DLCsi}	117	Data Low setup time	Before SCL RE	$2 \times t_{CLK}$	-
t_{SCLfi}	116	SCL signal Rise time		-	300
t_{SCLri}	116	SCL signal Fall time		-	1000
$t_{SCLlowi}$	119	SCL low time	After SCL Falling Edge (FE)	$16 \times t_{CLK}$	-
$t_{SCLhighi}$	119	SCL high time	After SCL RE	$16 \times t_{CLK}$	-
t_{SDAfl}	116	SDA signal Fall time		-	300
t_{SDAri}	116	SDA signal Rise time		-	1000
t_{SDAhi}	119	SDA hold time	After SCL FE	0	-
t_{SDAsi}	119	SDA setup time	Before SCL RE	$2 \times t_{CLK}$	-
ACCESS.bus Output Signals					
t_{BUFo}	117	Bus free time between Stop and Start Condition		$t_{SCLhigho}$	-
t_{CSTOso}	117	SCL setup time	Before Stop Condition	$t_{SCLhigho}$	-
t_{CSTRho}	117	SCL hold time	After Start Condition	$t_{SCLhigho}$	-
t_{CSTRso}	118	SCL setup time	Before Start Condition	$t_{SCLhigho}$	-
t_{DHCso}	118	Data High setup time	Before SCL R.E.	$t_{SCLhigho} - t_{SDAro}$	-
t_{DLCso}	117	Data Low setup time	Before SCL R.E.	$t_{SCLhigho} - t_{SDAfo}$	-
t_{SCLfo}	116	SCL signal Fall time		-	300 [c]
t_{SCLro}	116	SCL signal Rise time		-	- [d]
$t_{SCLlowo}$	119	SCL low time	After SCL F.E.	$(K \times t_{CLK}) - 1$ [e]	-
$t_{SCLhigho}$	119	SCL high time	After SCL R.E.	$(K \times t_{CLK}) - 1$ [e]	-
t_{SDAfo}	116	SDA signal Fall time		-	300
t_{SDAro}	116	SDA signal Rise time		-	-
t_{SDAho}	119	SDA hold time	After SCL F.E.	$(7 \times t_{CLK}) - t_{SCLfo}$	-
t_{SDAvo}	119	SDA valid time	After SCL F.E.	-	$(7 \times t_{CLK}) + t_{RD}$

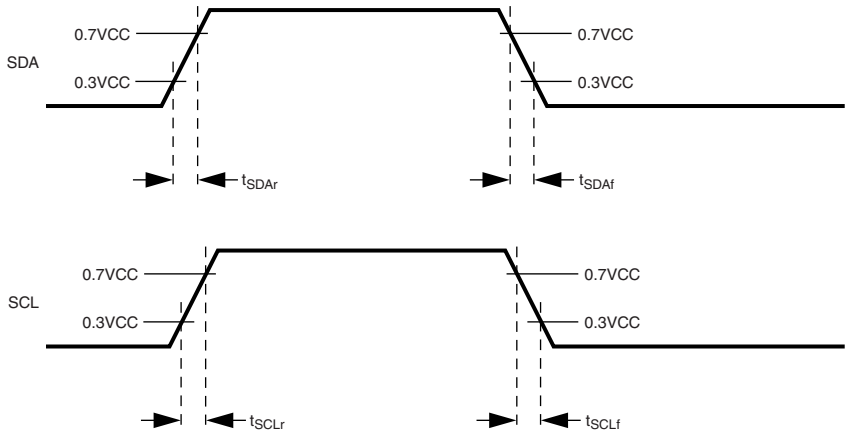

Note: In the timing tables the parameter name is added with an "o" for output signal timing and "i" for input signal timing.

DS106

Figure 116. ACB Signals (SDA and SCL) Timing

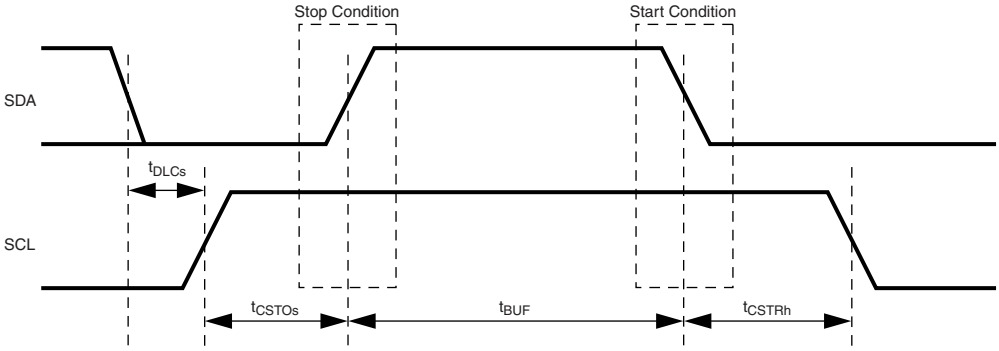

Note: In the timing tables the parameter name is added with an "o" for output signal timing and "i" for input signal timing. DS107

Figure 117. ACB Start and Stop Condition Timing

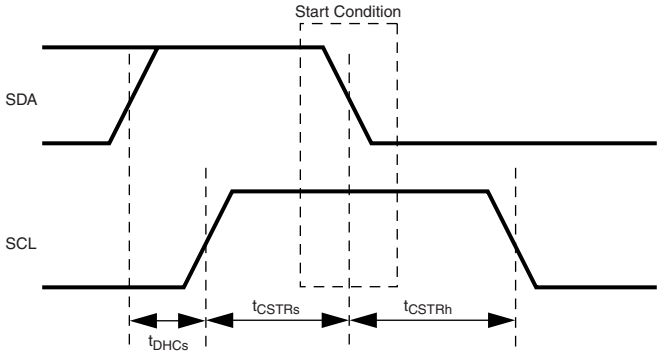

Note: In the timing tables the parameter name is added with an "o" for output signal timing and "i" for input signal timing.

DS108

Figure 118. ACB Start Condition Timing

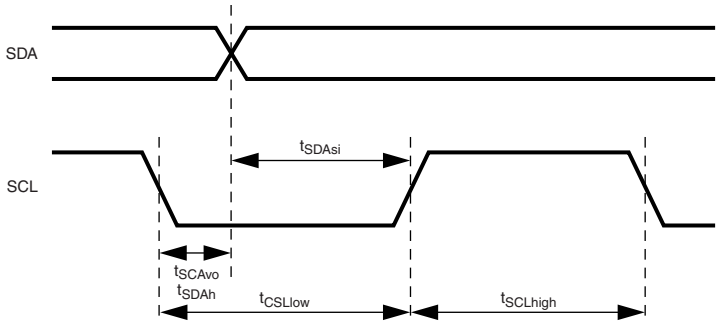

Note: In the timing tables the parameter name is added with an "o" for output signal timing and "i" for input signal timing. unless the parameter already includes the suffix.

DS109

Figure 119. ACB Data Timing

27.11 MULTI-FUNCTION TIMER (MFT) TIMING

Table 79 Multi-Function Timer Input Signals

Symbol	Figure	Description	Reference	Min (ns)	Max (ns)
t_{TAH}	120	TA High Time	Rising Edge (RE) on CLK	T_{CLK} + 5	
t_{TAL}	120	TA Low Time	RE on CLK	T_{CLK} + 5	
t_{TBH}	120	TB High Time	RE on CLK	T_{CLK} + 5	
t_{TBL}	120	TB Low Time	RE on CLK	T_{CLK} + 5	

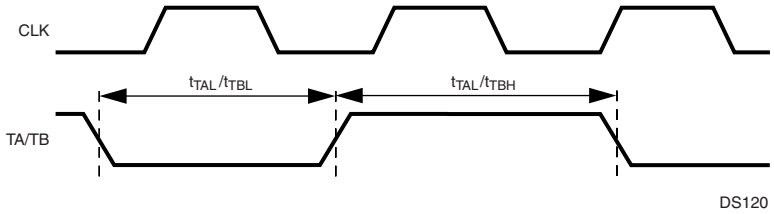

Figure 120. Multi-Function Timer Input Timing

27.12 VERSATILE TIMING UNIT (VTU) TIMING

Table 80 Versatile Timing Unit Input Signals

Symbol	Figure	Description	Reference	Min (ns)	Max (ns)
t_{TIOH}	120	TIOx Input High Time	Rising Edge (RE) on CLK	$1.5 \times T_{CLK} + 5ns$	
t_{TIOL}	120	TIOx Input Low Time	RE on CLK	$1.5 \times T_{CLK} + 5ns$	

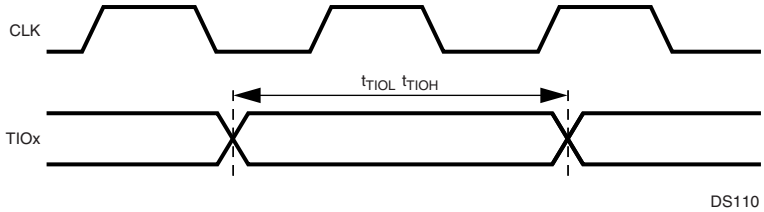

Figure 121. Versatile Timing Unit Input Timing

27.13 EXTERNAL BUS TIMING

Table 81 External Bus Signals

Symbol	Figure	Description	Reference	Min (ns)	Max (ns)
External Bus Input Signals					
t_1	122, 124, 125, 126	Input Setup Time D[15:0]	Before Rising Edge (RE) on CLK	8	-
t_2	122, 124, 125, 126	Output Hold Time D[15:0]	After RE on CLK	0	-
External Bus Output Signals					
t_3	122, 123	Output Valid Time D[15:0]	After RE on CLK	-	8
t_4	122, 123, 124, 125, 126	Output Valid Time A[21:0] (CP3BT10) A[22:0] (CP3BT13)	After RE on CLK	-	8
t_5	122, 123, 124, 125, 126	Output Active/Inactive Time $\overline{RD}$ $\overline{SEL[1:0]}$ $\overline{SELIO}$	After RE on CLK	-	8
t_6	122, 123	Output Active/Inactive Time $\overline{WR[1:0]}$	After RE on CLK	-	0.5 Tclk + 8
t_7	124	Minimum Inactive Time $\overline{RD}$	At 2.0V	Tclk - 4	-
t_8	122	Output Float Time D[15:0]	After RE on CLK	-	8
t_9	122	Minimum Delay Time	From $\overline{RD}$ Trailing Edge (TE) to D[15:0] driven	Tclk - 4	-
t_{10}	122, 123	Minimum Delay Time	From $\overline{RD}$ TE to $\overline{SELn}$ Leading Edge (LE)	0	-
t_{11}	123	Minimum Delay Time	From $\overline{SELx}$ TE to $\overline{SELy}$ LE	0	-
t_{12}	122, 123, 124, 125, 126	Output Hold Time A22 (CP3BT13 only) A[21:0] D[15:0] $\overline{RD}$ $\overline{SEL[2:0]}$ $\overline{SELIO}$	After RE on CLK	0	-
t_{13}	122, 123	Output Hold Time $\overline{WR[1:0]}$	After RE on CLK	0.5 Tclk - 3	-

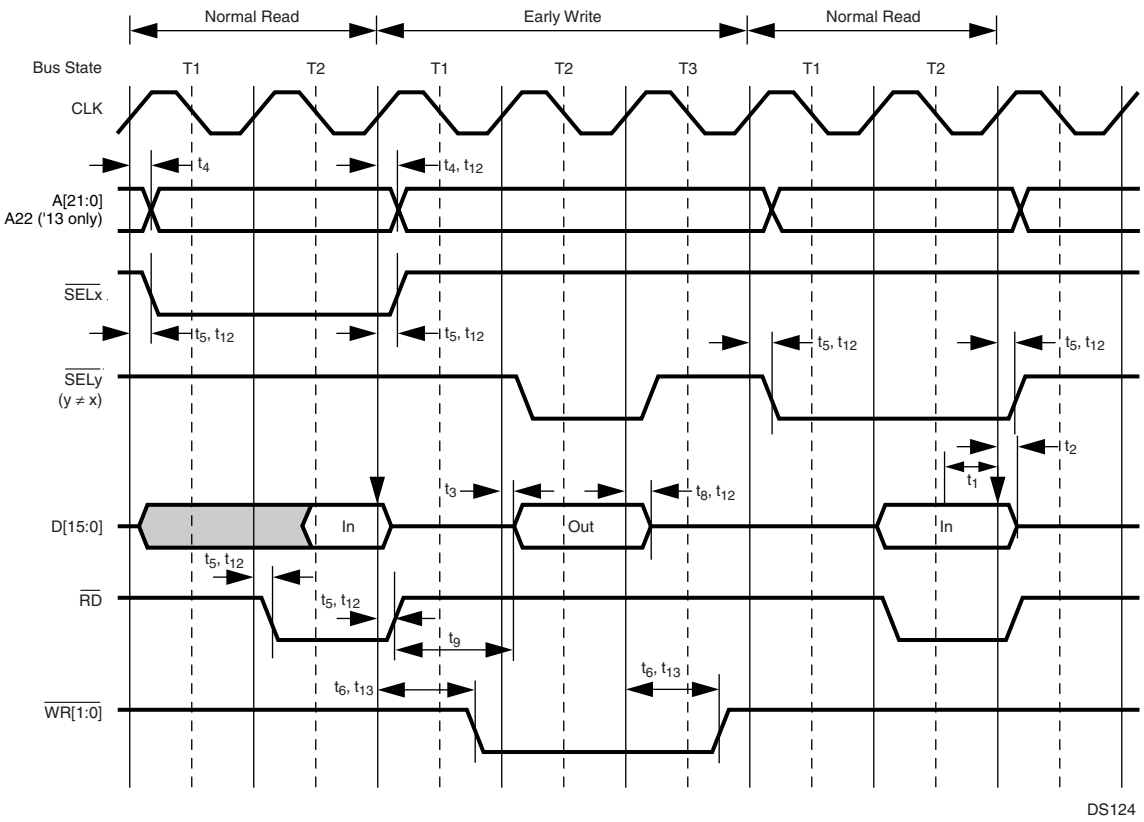

Figure 122. Early Write Between Normal Read Cycles (No Wait States)

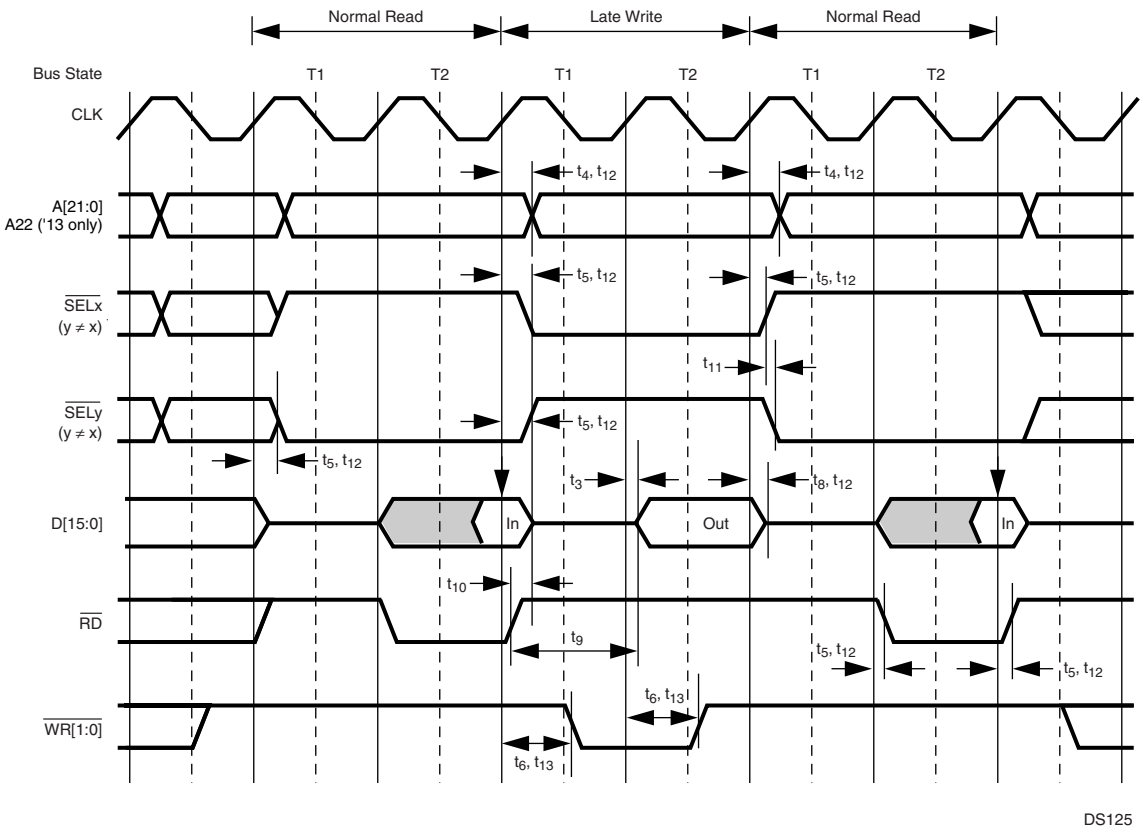

Figure 123. Late Write Between Normal Read Cycles (No Wait States)

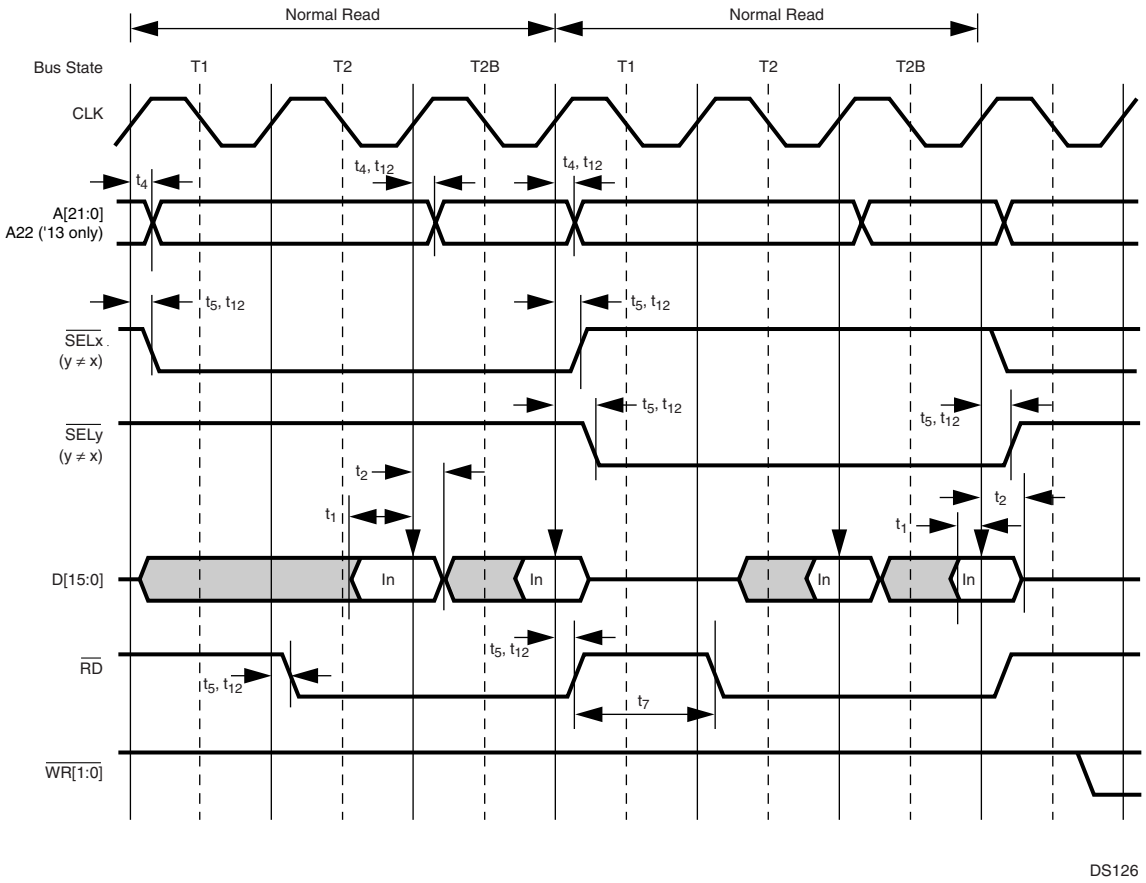

Figure 124. Consecutive Normal Read Cycles (Burst, No Wait States)

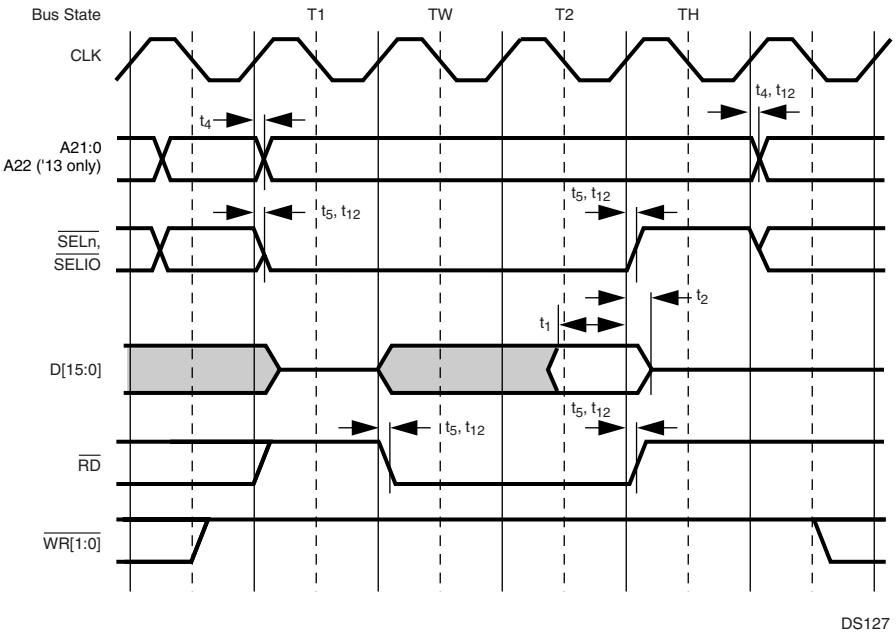

Figure 125. Normal Read Cycle (Wait Cycle Followed by Hold Cycle)

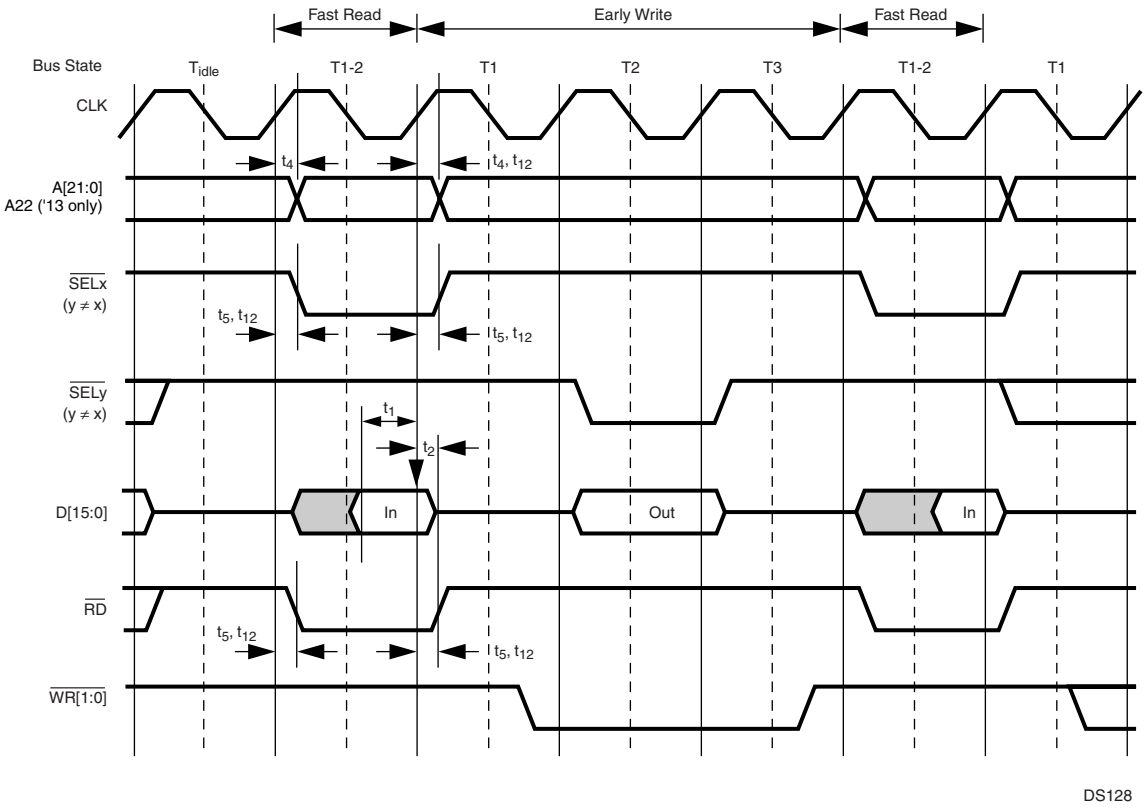

Figure 126. Early Write Between Fast Read Cycles

28.0 Pin Assignments

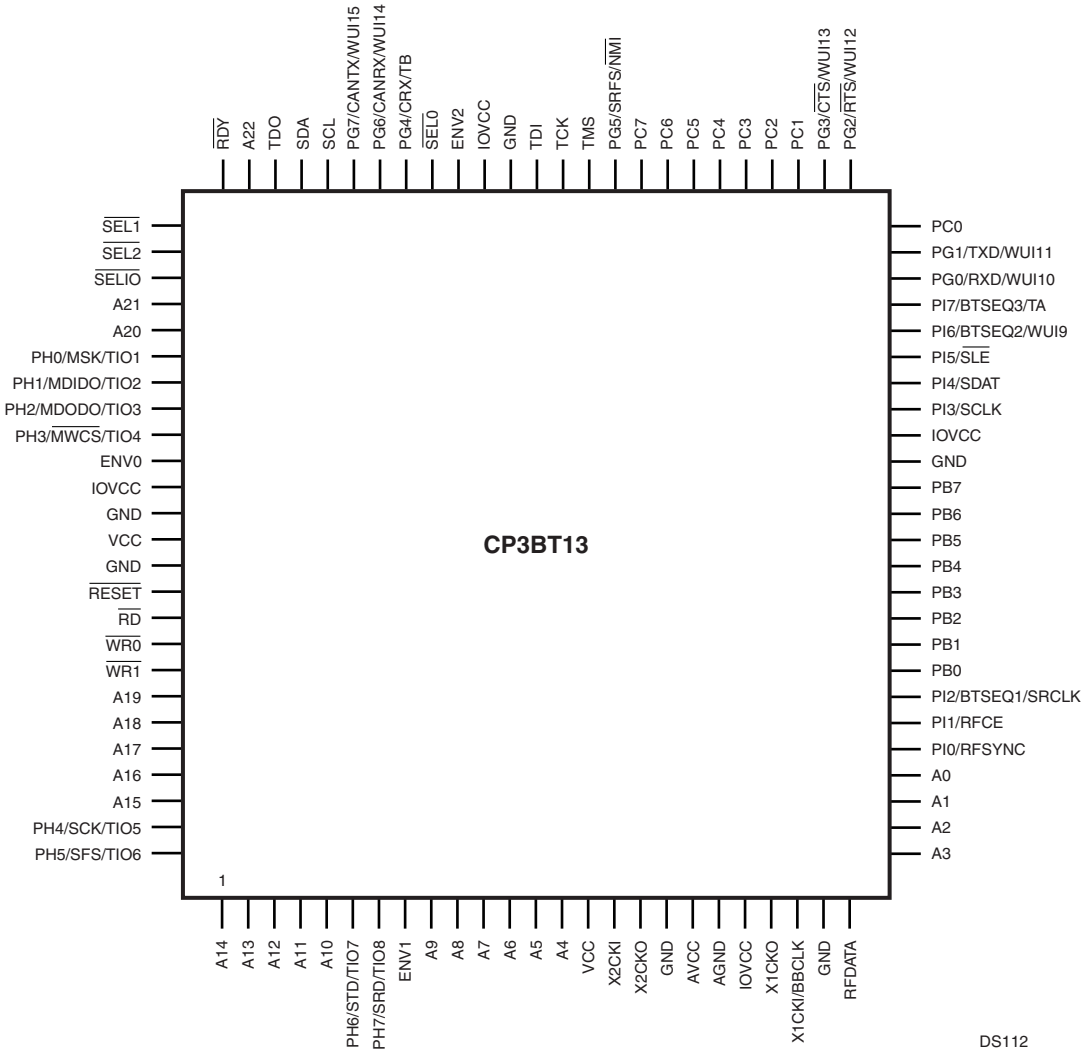

Figure 127. CP3BT13 in the 100-pin LQFP Package (Top View)

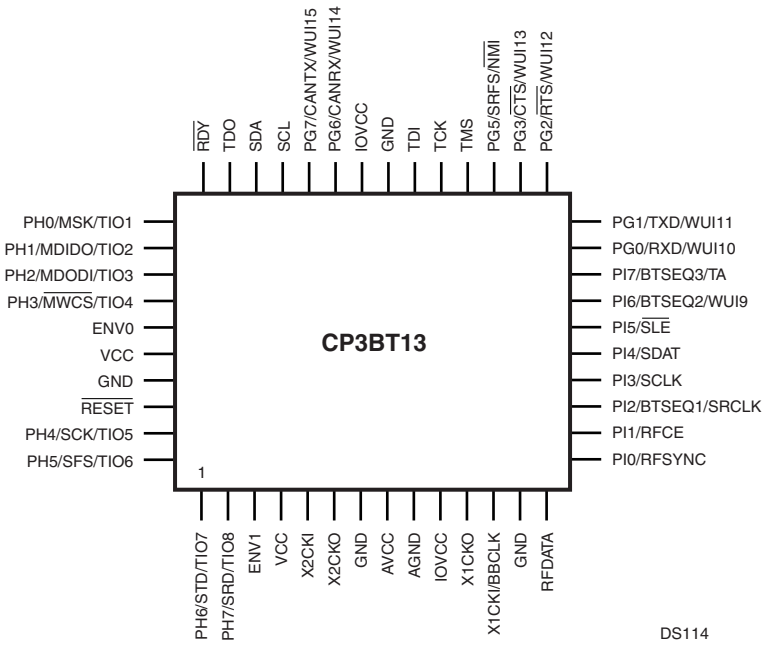

Figure 128. CP3BT13 in the 48-pin CSP Package (Top View)

29.0 Revision History

Table 82 Revision History

Date	Major Changes From Previous Version
8/5/02	Split the CP3BT10/CP3BT13 data sheet into separate data sheets for each chip. Added description of RDPROT field.
8/15/02	Clarified conditions for software DMA transfer request in Section 9.4. Removed commercial temperature range device.
9/25/02	Changed I/O Zone bus width to allow 8 bits. Clarified UART synchronous mode only allowed on 100-pin devices.
10/8/02	Changed flash programming sequence to remove checking FMBUSY after each row.
10/16/02	Corrections to flash memory programming sequence and MFT block diagrams.
11/11/02	Numerous minor corrections. Added more description to AAI section. Added external reset circuit. Fixed problems with figures.
11/21/02	Converted to new data sheet format.
1/13/03	Removed erroneous warning to always write the IOCFG register with bit 1 set. Alternate clock source for Advanced Audio Interface changed to Aux1 clock. Changed warning about clock glitches to say Microwire interface must be disabled when modifying bits in MWCTL1 register. Changed bit settings which occur in step 2 of the sequence of ACCESS.bus slave mode address match or global match. Timer Mode Control Register bit 7 is the TEN bit (a bit description has been added). Polarity of all of the bits in the INTCTL register has been inverted.
5/20/03	Updated DC specifications. Fixed errors in Microwire bit and pin names. Changed UART pin names to TXD and RXD. Added Section 11.6 “Auxiliary Clocks”. Changed diagram of I/O Port Pin Logic (Section 14).
11/14/03	Defined valid range of SCDV field in Microwire/SPI module. Noted default PRSSC register value generates a Slow Clock frequency slightly higher than 32768 Hz. Clarified usage of CVSTAT register bits and fields in CVSD/PCM module. Updated layout of Bluetooth LLC registers. Added usage hint for avoiding ACCESS.bus module bus error. Added usage hint for avoiding CAN unexpected loopback condition.

Table 82 Revision History (Continued)

Date	Major Changes From Previous Version
2/28/04	Changed NSID designations in the product selection guide. Updated Bluetooth section for LMX5251 and LMX5252 radio chips. Added BTSEQ[3:1] signals to pin descriptions, GPIO alternate functions, and package pin assignments. Added entry for CTIM register in CAN section register list. Changed CVSD Conversion section. Changed definition of the RESOLUTION field of the CVSD Control register (CVCTRL). Changed DC specification for Vxl2.
3/16/04	Changed LMX5251 interface circuit. Updated DC specifications Iccid and Iccq.
5/20/04	Moved revision history in front of physical dimensions. Changed back page disclaimers.
6/23/04	Changed absolute maximum supply voltage to 3.6V. Changed processor selection guide table.
7/3/04	Changed footnote b in DC specs. Changed product selection guide table.
7/16/04	Changed product selection guide table.
8/24/04	Added AC timing specifications for GPIO and UART.
9/7/04	In Section 17.2, added sentence that an external frame sync must be used in asynchronous mode. In Section 12, in several places noted that Idle and Halt modes may only be entered from Active mode, and the DHC and DMC bits must be set when entering Idle and Halt modes. Added usage hints Section 17.8. Removed Section 21.4.1.
4/4/05	Added new reset circuits. Added note about fluctuations in response due to SDI activity. New back page.

30.0 Physical Dimensions (millimeters) unless otherwise noted

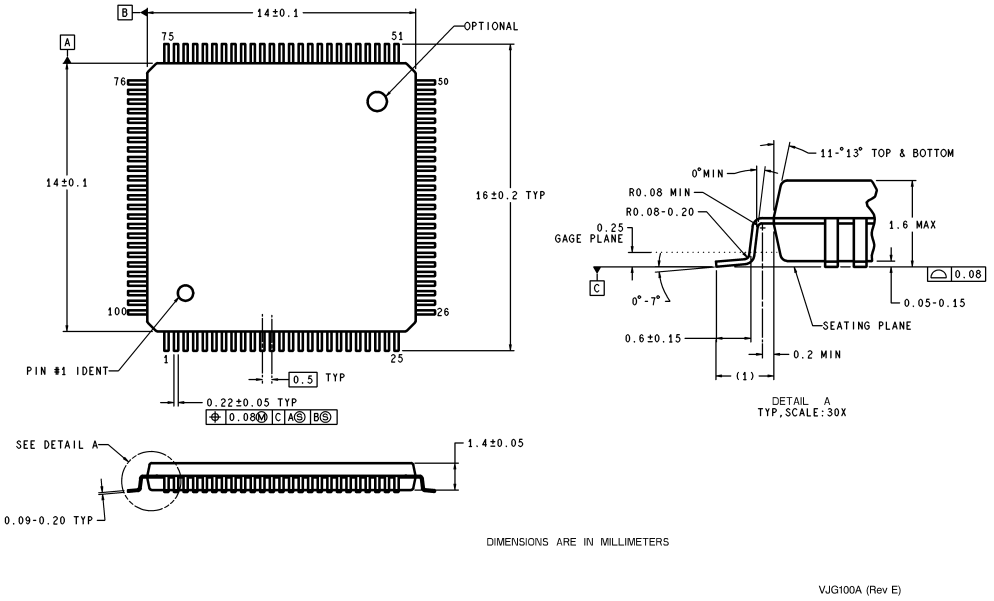

Figure 129. 100-Pin LQFP Package

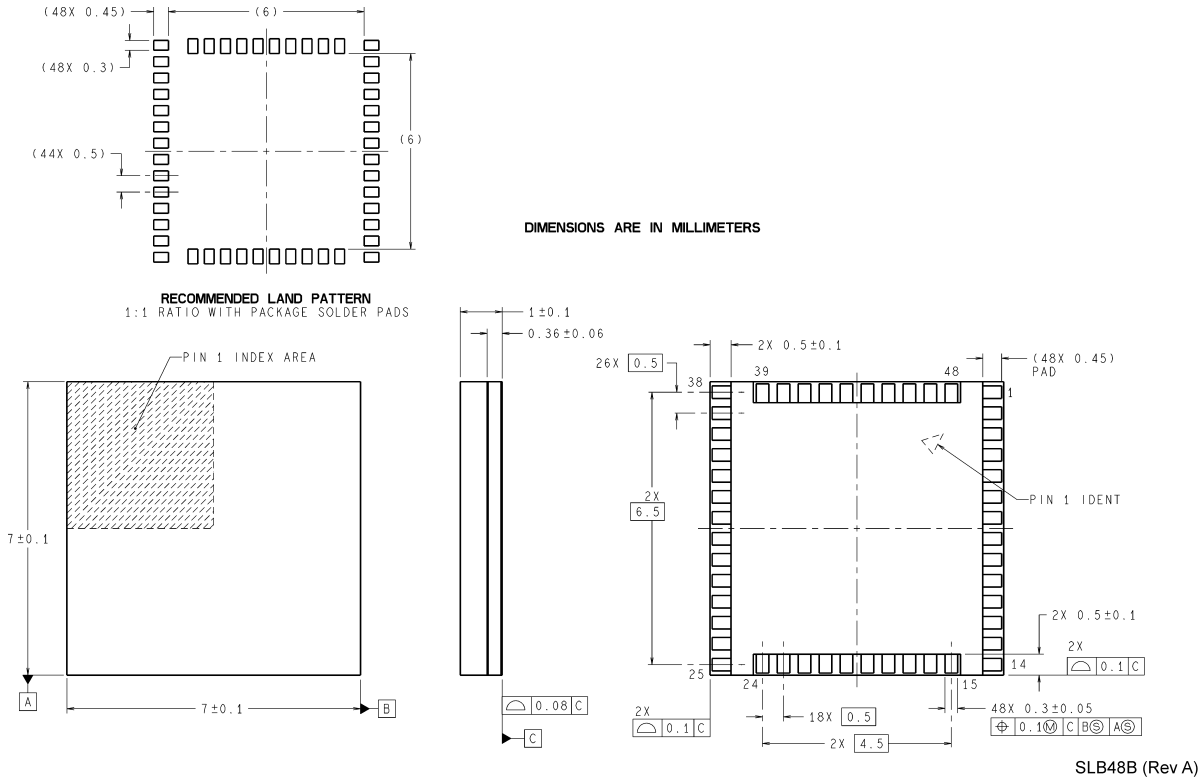

Figure 130. 48-Pin CSP Package

National does not assume any responsibility for use of any circuitry described, no circuit patent licenses are implied and National reserves the right at any time without notice to change said circuitry and specifications.

For the most current product information visit us at www.national.com.

LIFE SUPPORT POLICY

NATIONAL'S PRODUCTS ARE NOT AUTHORIZED FOR USE AS CRITICAL COMPONENTS IN LIFE SUPPORT DEVICES OR SYSTEMS WITHOUT THE EXPRESS WRITTEN APPROVAL OF THE PRESIDENT AND GENERAL COUNSEL OF NATIONAL SEMICONDUCTOR CORPORATION. As used herein:

1. Life support devices or systems are devices or systems which, (a) are intended for surgical implant into the body, or (b) support or sustain life, and whose failure to perform, when properly used in accordance with instructions for use provided in the labeling, can be reasonably expected to result in a significant injury to the user.
2. A critical component is any component of a life support device or system whose failure to perform can be reasonably expected to cause the failure of the life support device or system, or to affect its safety or effectiveness.

BANNED SUBSTANCE COMPLIANCE

National Semiconductor certifies that the products and packing materials meet the provisions of the Customer Products Stewardship Specification (CSP-9-111C2) and the Banned Substances and Materials of Interest Specification (CSP-9-111S2) and contain no "Banned Substances" as defined in CSP-9-111S2.

National Semiconductor
Americas Customer
Support Center
Email: new.feedback@nsc.com
Tel: 1-800-272-9959

National Semiconductor
Europe Customer Support Center
Fax: +49 (0) 180-530 85 86
Email: europe.support@nsc.com
Deutsch Tel: +49 (0) 69 9508 6208
English Tel: +44 (0) 870 24 0 2171
Francais Tel: +33 (0) 1 41 91 8790

National Semiconductor
Asia Pacific Customer
Support Center
Email: ap.support@nsc.com

National Semiconductor
Japan Customer Support Center
Fax: 81-3-5639-7507
Email: jpn.feedback@nsc.com
Tel: 81-3-5639-7560

www.national.com